DAV-X1

SERVICE MANUAL

Ver. 1.0 2005.05

US Model
Canadian Model
AEP Model
UK Model
E Model

- DAV-X1 is composed of the following models.
  As service manuals are issued for each component model, please refer to them.

COMPONENT MODEL NAME

	DAV-X1
Super Audio CD/DVD Receiver	HCD-X1
Front Speaker	SS-X1F
Subwoofer	SS-WSX1

SPECIFICATIONS

Power requirements
US, Canadian models: 120 V AC, 60 Hz
except US, Canadian models:
220 – 240 V AC, 50/60 Hz
Power consumption On: 85 W
Standby: 0.3 W (at the Power Saving Mode)
Dimensions (approx.) 380 × 76 × 293 mm
(15 × 3 × 11 5/8 inches) (w/h/d) incl. projecting parts
Mass (approx.)
US, Canadian models: 4.6 kg (10 lb 3 oz)
except US, Canadian models:
4.5 kg
Supplied accessories
- Speakers (2)
- Subwoofer (1)
- AM loop antenna (aerial) (1)
- FM wire antenna (aerial) (1)
- Speaker cord (1)
- Video Cord (1)
- Remote Commander (remote) (1)
- Size AAA (R03) batteries (2)
- Operating Instructions
- Setup Disc (1)
- Quick Start Guide (card)
- Speaker pads (8)

Design and specifications are subject to change without notice.

ACCESSORIES

Part No.	Description	Remark
1-479-308-11	REMOTE COMMANDER (RM-ADP004)	
1-501-807-12	ANTENNA (FM) (AEP, UK, SP, RU)	
1-754-059-12	ANTENNA, LOOP (AM)	
1-754-147-41	ANTENNA (FM) (US, CND)	
1-769-108-11	CORD, CONNECTION (VIDEO CORD)	
1-830-434-11	CORD (WITH CONNECTOR) (SPEAKER CORD)	
2-591-315-01	DVD-ROM(DEMO) (SET UP DISC) (for NTSC) (US, CND)	
2-591-315-11	DVD-ROM(DEMO) (SET UP DISC) (for PAL) (AEP, UK, SP, RU)	
2-594-458-11	MANUAL, INSTRUCTION (ENGLISH) (US, CND)	
2-594-458-21	MANUAL, INSTRUCTION (FRENCH) (CND)	
2-594-459-11	MANUAL, INSTRUCTION (ENGLISH) (SP)	
2-594-459-21	MANUAL, INSTRUCTION (FRENCH) (SP)	
2-594-459-31	MANUAL, INSTRUCTION (SPANISH) (SP)	
2-594-459-41	MANUAL, INSTRUCTION (TRADITIONAL CHINESE) (SP)	
2-594-460-11	MANUAL, INSTRUCTION (ENGLISH) (AEP, UK)	
2-594-460-21	MANUAL, INSTRUCTION (FRENCH, GERMAN, ITALIAN, DUTCH) (AEP)	
2-594-460-31	MANUAL, INSTRUCTION (SPANISH, POLISH, SWEDISH) (AEP)	
2-594-460-41	MANUAL, INSTRUCTION (RUSSIAN) (RU)	
2-594-461-11	MANUAL, INSTRUCTION (DANISH, FINNISH, PORTUGUESE) (AEP)	
2-594-461-21	MANUAL, INSTRUCTION (GREEK) (AEP)	
2-594-461-31	MANUAL, INSTRUCTION (CZECH, HUNGARIAN) (AEP)	
2-594-461-41	MANUAL, INSTRUCTION (TURKISH) (AEP)	
2-594-461-51	MANUAL, INSTRUCTION (SLOVAKIAN) (AEP)	
4-210-254-02	CUSHION (FOOT) (SPEAKER PADS) (8pieces)	

- Abbreviation
  CND : Canadian model
  SP : Singapore model
  RU : Russian model

DVD HOME THEATRE SYSTEM

9-879-628-01
2005E05-1
© 2005.05

Sony Corporation
Audio Group
Published by Sony Engineering Corporation

SONY®

REVISION HISTORY

Clicking the version allows you to jump to the revised page.
Also, clicking the version at the upper right on the revised page allows you to jump to the next revised page.

Ver.	Date	Description of Revision
1.0	2005.05	New

HCD-X1

SERVICE MANUAL

Ver. 1.2 2005.12

US Model
Canadian Model
AEP Model
UK Model
E Model

HCD-X1 is the amplifier, super audio CD/DVD system, tuner and video section in DAV-X1.

This product incorporates copyright protection technology that is protected by U.S. patents and other intellectual property rights. Use of this copyright protection technology must be authorized by Macrovision, and is intended for home and other limited viewing uses only unless otherwise authorized by Macrovision. Reverse engineering or disassembly is prohibited.

This system incorporates with Dolby*1 Digital and Dolby Pro Logic (II) adaptive matrix surround decoder and the DTS*2 Digital Surround System.

This system perfectly decodes 5.1 channel signal, but you cannot add other commercially available surround speakers.

*1 Manufactured under license from Dolby Laboratories.
"Dolby," "Pro Logic," and the double-D symbol are trademarks of Dolby Laboratories.

*2 Manufactured under license from Digital Theater Systems, Inc.
"DTS" and "DTS Digital Surround" are trademarks of Digital Theater Systems, Inc.

Model Name Using Similar Mechanism	NEW
DVD Mechanism Type	CDM85-DVBU102
Optical Pick-up Block Name	KHM-310CAA

SPECIFICATIONS

AUDIO POWER SPECIFICATIONS (US model only)

POWER OUTPUT AND TOTAL HARMONIC DISTORTION: With 6 ohm loads, both channels driven, from 200 – 20,000 Hz; rated 20 W per channel minimum RMS power, with no more than 0.7 % total harmonic distortion from 250 milli watts to rated output.

Amplifier section

Front: Power output (rated): 40 W + 40 W (6 ohms, 1 kHz, THD 1 %)
Continuous RMS power output (reference): 50 W + 50 W (6 ohms at 1 kHz, THD 10 %)

Front surround: Power output (rated): 40 W + 40 W (6 ohms, 1 kHz, THD 1 %)
Continuous RMS power output (reference): 50 W + 50 W (6 ohms at 1 kHz, THD 10 %)

Subwoofer: Power output (rated): 40 W + 40 W (6 ohms, 100 Hz, THD 1 %)
Continuous RMS power output (reference): 50 W + 50 W (6 ohms at 100 Hz, THD 10 %)

* *Depending on the sound field settings and the source, there may be no sound output.*

Inputs (Analogue)
VIDEO 1/SAT 1, VIDEO 2/SAT 2: Sensitivity: 250/450 mV RMS
Impedance: 50 kilohms
TV: Sensitivity: 450 mV RMS
Impedance: 50 kilohms

Inputs (Digital)
VIDEO 1/SAT 1, VIDEO 2/SAT 2, TV: Impedance: 75 ohms

Super Audio CD/DVD system

Laser: Semiconductor laser (DVD: λ = 650 nm) (CD: λ = 790 nm)
Emission duration: continuous

Signal format system
US, Canadian models: NTSC
except US, Canadian models: NTSC/PAL

– Continued on next page –

SUPER AUDIO CD/DVD RECEIVER

9-879-627-03
2005L05-1
© 2005.12

Sony Corporation
Home Audio Division
Published by Sony Engineering Corporation

SONY®

Tuner section

System	PLL quartz-locked digital synthesizer system
FM tuner section	
Tuning range	87.5 – 108.0 MHz US, Canadian models: (100 kHz step) except US, Canadian models: (50 kHz step)
Antenna (aerial)	FM wire antenna (aerial)
Antenna (aerial) terminals	75 ohms, unbalanced
Intermediate frequency	10.7 MHz
AM tuner section	
Tuning range	
US, Canadian models:	530 – 1,710 kHz (with the interval set at 10 kHz) 531 – 1,710 kHz (with the interval set at 9 kHz)
AEP, UK, Russian models:	531 – 1,602 kHz (with the interval set at 9 kHz)
Singapore model:	531 – 1,602 kHz (9 kHz) 530 – 1,710 (10 kHz)
Antenna (aerial)	AM loop antenna (aerial)
Intermediate frequency	450 kHz

Video section

Outputs	Video: 1 Vp-p 75 ohms S video: Y: 1 Vp-p 75 ohms C: 0.286 Vp-p 75 ohms COMPONENT: Y: 1 Vp-p 75 ohms PB/CB, PR/CR: 0.7 Vp-p 75 ohms
Input	VIDEO: 1 Vp-p 75 ohms S video: Y: 1 Vp-p 75 ohms C: 0.286 Vp-p 75 ohms

General

Power requirements	
US, Canadian models:	120 V AC, 60 Hz
except US, Canadian models:	220 – 240 V AC, 50/60 Hz
Power consumption	On: 85 W Standby: 0.3 W (at the Power Saving Mode)
Dimensions (approx.)	380 × 76 × 293 mm (15 × 3 × 11 5/8 inches) (w/h/d) incl. projecting parts
Mass (approx.)	
US, Canadian models:	4.6 kg (10 lb 3 oz)
except US, Canadian models:	4.5 kg

Design and specifications are subject to change without notice.

SAFETY-RELATED COMPONENT WARNING!!

COMPONENTS IDENTIFIED BY MARK ⚠ OR DOTTED LINE WITH MARK ⚠ ON THE SCHEMATIC DIAGRAMS AND IN THE PARTS LIST ARE CRITICAL TO SAFE OPERATION. REPLACE THESE COMPONENTS WITH SONY PARTS WHOSE PART NUMBERS APPEAR AS SHOWN IN THIS MANUAL OR IN SUPPLEMENTS PUBLISHED BY SONY.

ATTENTION AU COMPOSANT AYANT RAPPORT À LA SÉCURITÉ!

LES COMPOSANTS IDENTIFIÉS PAR UNE MARQUE ⚠ SUR LES DIAGRAMMES SCHÉMATIQUES ET LA LISTE DES PIÈCES SONT CRITIQUES POUR LA SÉCURITÉ DE FONCTIONNEMENT. NE REMPLACER CES COM- POSANTS QUE PAR DES PIÈCES SONY DONT LES NUMÉROS SONT DONNÉS DANS CE MANUEL OU DANS LES SUPPLÉMENTS PUBLIÉS PAR SONY.

Notes on chip component replacement

- Never reuse a disconnected chip component.
- Notice that the minus side of a tantalum capacitor may be damaged by heat.

Flexible Circuit Board Repairing

- Keep the temperature of the soldering iron around 270 ˚C during repairing.
- Do not touch the soldering iron on the same conductor of the circuit board (within 3 times).
- Be careful not to apply force on the conductor when soldering or unsoldering.

CAUTION

Use of controls or adjustments or performance of procedures other than those specified herein may result in hazardous radiation exposure.

This appliance is classified as a CLASS 1 LASER product. The CLASS 1 LASER PRODUCT MARKING is located on the bottom of the unit.

SAFETY CHECK-OUT

After correcting the original service problem, perform the following safety check before releasing the set to the customer:
Check the antenna terminals, metal trim, “metallized” knobs, screws, and all other exposed metal parts for AC leakage.
Check leakage as described below.

LEAKAGE TEST

The AC leakage from any exposed metal part to earth ground and from all exposed metal parts to any exposed metal part having a return to chassis, must not exceed 0.5 mA (500 microamperes.). Leakage current can be measured by any one of three methods.

1. A commercial leakage tester, such as the Simpson 229 or RCA WT-540A. Follow the manufacturers’ instructions to use these instruments.
2. A battery-operated AC milliammeter. The Data Precision 245 digital multimeter is suitable for this job.
3. Measuring the voltage drop across a resistor by means of a VOM or battery-operated AC voltmeter. The “limit” indication is 0.75 V, so analog meters must have an accurate low-voltage scale. The Simpson 250 and Sanwa SH-63Trd are examples of a passive VOM that is suitable. Nearly all battery operated digital multimeters that have a 2 V AC range are suitable. (See Fig. A)

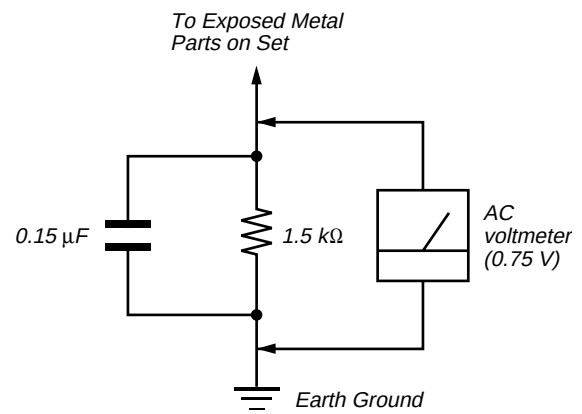

Fig. A. Using an AC voltmeter to check AC leakage.

About This Manual

- The instructions in this manual describe the controls on the remote. You can also use the controls on the system if they have the same or similar names as those on the remote.
- The Control Menu items may be different depending on the area.
- "DVD" may be used as a general term for DVD VIDEOs, DVD+RWs/DVD+Rs, and DVD-RWs/DVD-Rs.
- Measurements are expressed in feet (ft) for North American models.
- The following symbols are used in this manual.

Symbol	Meaning
DVD-V	Functions available for DVD VIDEOs, DVD-Rs/DVD-RWs in video mode, and DVD+Rs/DVD+RWs
DVD-RW	Functions available for DVD-RWs in VR (Video Recording) mode
VIDEO CD	Functions available for VIDEO CDs (including Super VCDs or CD-Rs/CD-RWs in video CD format or Super VCD format)
Super Audio CD	Functions available for Super Audio CDs
CD	Functions available for music CDs or CD-Rs/CD-RWs in music CD format
DATA-CD	Functions available for DATA CDs (CD-ROMs/CD-Rs/CD-RWs containing MP3* audio tracks and JPEG image files)

* MP3 (MPEG1 Audio Layer 3) is a standard format defined by ISO/MPEG which compresses audio data.

This System Can Play the Following Discs

Format of discs	Disc logo
DVD VIDEO	DVD VIDEO
DVD-RW	DVD RW
VIDEO CD	COMPACT disc DIGITAL VIDEO
Super Audio CD*1	SUPER AUDIO CD
Audio CD*2	COMPACT disc DIGITAL AUDIO TEXT
CD-R/CD-RW (audio data) (MP3 files) (JPEG files)	COMPACT disc DIGITAL AUDIO Recordable; COMPACT disc DIGITAL AUDIO ReWritable; COMPACT disc Recordable; COMPACT disc ReWritable

The "DVD VIDEO" logo and "DVD-RW" logo are trademarks.

*1 Except for multi-channel playback area.
*2 CD text data can be displayed (album title only).

Note about CDs/DVDs

The system can play CD-ROMs/CD-Rs/CD-RWs recorded in the following formats:
– audio CD format
– video CD format
– MP3 audio tracks, JPEG image files, and DivX video files of format conforming to ISO 9660 Level 1/Level 2, or its extended format, Joliet

The system can play DVD-ROMs/DVD+RWs/DVD-RWs/DVD+Rs/DVD-Rs recorded in the following formats:
– DivX video files of format conforming to UDF.

Example of discs that the system cannot play

The system cannot play the following discs:
- CD-ROMs recorded in PHOTO CD format
- Data part of CD-Extras
- DVD Audios
- DVD-RAMs
- A DVD VIDEO with a different region code.
- A disc that has a non-standard shape (e.g., card shaped, heart shaped).
- A disc that has a commercially available accessory attached, such as a label or ring.

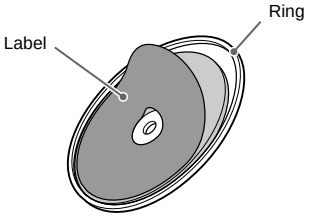

- An adapter to convert an 8 cm disc to standard size.

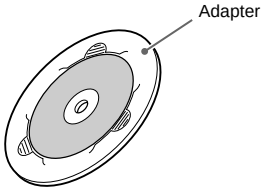

- A disc with paper or stickers on it.
- A disc that has the adhesive of cellophane tape or a sticker still left on it.

Notes about CD-R/CD-RW/DVD-R/DVD-RW/DVD+R/DVD+RW

In some cases, CD-R/CD-RW/DVD-R/DVD-RW/DVD+R/DVD+RW cannot be played on this system due to the recording quality or physical condition of the disc, or the characteristics of the recording device and authoring software.
The disc will not play if it has not been correctly finalized. For more information, see the operating instructions for the recording device.
Note that discs created in the Packet Write format cannot be played.

Music discs encoded with copyright protection technologies

This product is designed to play back discs that conform to the Compact Disc (CD) standard.
Recently, various music discs encoded with copyright protection technologies are marketed by some record companies. Please be aware that among those discs, there are some that do not conform to the CD standard and may not be playable by this product.

Note on DualDisc

A DualDisc is a two sided disc product which mates DVD recorded material on one side with digital audio material on the other side. However, since the audio material side does not conform to the Compact Disc (CD) standard, playback on this product is not guaranteed.

Note about DVD-RW (Except for U.S./Canadian/European models)

Images in DVD-RWs with CPRM* protection may not be played if they contain a copy protection signal. "Copyright lock" appears on the screen.
* CPRM (Content Protection for Recordable Media) is a coding technology that protects the copyright of images.

Note on PBC (Playback Control) (VIDEO CDs)

This system conforms to Ver. 1.1 and Ver. 2.0 of VIDEO CD standards. You can enjoy two kinds of playback depending on the disc type.

Disc type	You can
VIDEO CDs without PBC functions (Ver. 1.1 discs)	Enjoy video playback (moving pictures) as well as music.
VIDEO CDs with PBC functions (Ver. 2.0 discs)	Play interactive software using menu screens displayed on the TV screen (PBC Playback), in addition to the video playback functions of Ver. 1.1 discs. Moreover, you can play high-resolution still pictures, if they are included on the disc.

About Multi Session CD

- This system can play Multi Session CDs when an MP3 audio track is contained in the first session. Any subsequent MP3 audio tracks recorded in later sessions can also be played back.
- This system can play Multi Session CDs when a JPEG image file is contained in the first session. Any subsequent JPEG image files recorded in later sessions can also be played back.
- If audio tracks and images in music CD format or video CD format are recorded in the first session, only the first session will be played back.

About the Super Audio CD

Super Audio CD is a new high-quality audio disc standard where music is recorded in the DSD (Direct Stream Digital) format (conventional CDs are recorded in the PCM format). The DSD format, using a sampling frequency 64 times higher than that of a conventional CD, and with 1-bit quantization, achieves both a wide frequency range and a wide dynamic range across the audible frequency range, and so provides music reproduction extremely faithful to the original sound.

Types of Super Audio CDs

There are two types of discs, depending on the Super Audio CD layer and CD layer combination.

- Super Audio CD layer: A high-density signal layer for Super Audio CD
- CD layer*1: A layer that is readable by a conventional CD player

Single layer disc
(a disc with a single Super Audio CD layer)

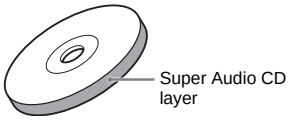

Hybrid disc*2
(a disc with an Super Audio CD layer and a CD layer)

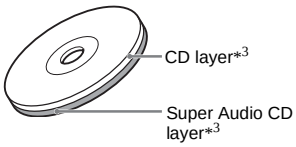

*1 You can play the CD layer on a conventional CD player.

*2 Since both layers are on one side, it is not necessary to turn the disc over.

*3 To select a layer, see “Selecting a Playback layer for a Super Audio CD”.

Region code

Your system has a region code printed on the back of the unit and will only play DVDs labeled with the same region code.
DVD VIDEOs labeled ALL will also play on this system.
If you try to play any other DVD VIDEO, the message [Playback prohibited by area limitations.] will appear on the TV screen.
Depending on the DVD VIDEO, no region code indication may be given even though playing the DVD VIDEO is prohibited by area restrictions.

Note on playback operations of DVDs and VIDEO CDs

Some playback operations of DVDs and VIDEO CDs may be intentionally set by software producers. Since this system plays DVDs and VIDEO CDs according to the disc contents the software producers designed, some playback features may not be available. Also, refer to the instructions supplied with the DVDs or VIDEO CDs.

TABLE OF CONTENTS

1. SERVICING NOTES 6

2. GENERAL 10

3. DISASSEMBLY
3-1. Disassembly Flow 12
3-2. Optical Pick-up Block (KHM-310CAA) 12
3-3. Side Panel (L/R) 13
3-4. Case (AL) 13
3-5. Front Panel Section 14
3-6. MAIN Board 15
3-7. D.C. Fan (M450), Back Panel Section 15
3-8. DVD Mechanism Deck (CDM85-DVBU102) 16
3-9. Chuck Cam, Belt 17

4. TEST MODE 18

5. ELECTRICAL ADJUSTMENTS 21

6. DIAGRAMS
6-1. Block Diagram – RF SERVO/VIDEO Section – 22
6-2. Block Diagram – HDMI Section (US and Canadian models) – 23
6-3. Block Diagram – MAIN Section – 24
6-4. Block Diagram – AMP Section – 25
6-5. Block Diagram – PANEL/POWER SUPPLY Section – 26
6-6. Printed Wiring Boards – DMB10 Section (1/2) – 28
6-7. Printed Wiring Board – DMB10 Section (2/2) – 29
6-8. Schematic Diagram – DMB10 Section (1/4) – 30
6-9. Schematic Diagram – DMB10 Section (2/4) – 31
6-10. Schematic Diagram – DMB10 Section (3/4) – 32
6-11. Schematic Diagram – DMB10 Section (4/4) – 33
6-12. Printed Wiring Board – MIB01 Board (Component Side) (US and Canadian models) – 34
6-13. Printed Wiring Board – MIB01 Board (Conductor Side) (US and Canadian models) – 35
6-14. Schematic Diagram – MIB01 Board (1/5) (US and Canadian models) – 36
6-15. Schematic Diagram – MIB01 Board (2/5) (US and Canadian models) – 37
6-16. Schematic Diagram – MIB01 Board (3/5) (US and Canadian models) – 38
6-17. Schematic Diagram – MIB01 Board (4/5) (US and Canadian models) – 39
6-18. Schematic Diagram – MIB01 Board (5/5) (US and Canadian models) – 40
6-19. Schematic Diagram – IO Board – 41
6-20. Printed Wiring Board – IO Board (Component Side) – 42
6-21. Printed Wiring Board – IO Board (Conductor Side) – 43
6-22. Printed Wiring Board – SCART Board (AEP, UK and Russian models) – 44
6-23. Schematic Diagram – SCART Board (AEP, UK and Russian models) – 45
6-24. Printed Wiring Board – MAIN Board (Component Side) – 46
6-25. Printed Wiring Board – MAIN Board (Conductor Side) – 47
6-26. Schematic Diagram – MAIN Board (1/4) – 48
6-27. Schematic Diagram – MAIN Board (2/4) – 49
6-28. Schematic Diagram – MAIN Board (3/4) – 50
6-29. Schematic Diagram – MAIN Board (4/4) – 51
6-30. Printed Wiring Board – SWITCH Board – 52
6-31. Schematic Diagram – SWITCH Board – 53
6-32. Printed Wiring Board – FL Board – 54
6-33. Schematic Diagram – FL Board – 55
6-34. Printed Wiring Board – POWER-AMP Board (Component Side) – 56
6-35. Printed Wiring Board – POWER-AMP Board (Conductor Side) – 57
6-36. Schematic Diagram – POWER-AMP Board (1/3) – 58
6-37. Schematic Diagram – POWER-AMP Board (2/3) – 59
6-38. Schematic Diagram – POWER-AMP Board (3/3) – 60

7. EXPLODED VIEWS
7-1. Case (AL), Side Panel Section 90
7-2. Front Panel Section 91
7-3. MAIN Board Section 92
7-4. POWER-AMP Board Section 93
7-5. Chassis Section 94
7-6. DVD Mechanism Deck Section (CDM85-DVBU102) ... 95

8. ELECTRICAL PARTS LIST 96

SECTION 1
SERVICING NOTES

NOTES ON HANDLING THE OPTICAL PICK-UP BLOCK OR BASE UNIT

The laser diode in the optical pick-up block may suffer electrostatic break-down because of the potential difference generated by the charged electrostatic load, etc. on clothing and the human body.
During repair, pay attention to electrostatic break-down and also use the procedure in the printed matter which is included in the repair parts.
The flexible board is easily damaged and should be handled with care.

NOTES ON LASER DIODE EMISSION CHECK

The laser beam on this model is concentrated so as to be focused on the disc reflective surface by the objective lens in the optical pick-up block. Therefore, when checking the laser diode emission, observe from more than 30 cm away from the objective lens.

UNLEADED SOLDER

Boards requiring use of unleaded solder are printed with the lead-free mark (LF) indicating the solder contains no lead.
(Caution: Some printed circuit boards may not come printed with the lead free mark due to their particular size)

: LEAD FREE MARK

Unleaded solder has the following characteristics.

- Unleaded solder melts at a temperature about 40 °C higher than ordinary solder.
  Ordinary soldering irons can be used but the iron tip has to be applied to the solder joint for a slightly longer time.
  Soldering irons using a temperature regulator should be set to about 350 °C.
  Caution: The printed pattern (copper foil) may peel away if the heated tip is applied for too long, so be careful!
- Strong viscosity
  Unleaded solder is more viscou-s (sticky, less prone to flow) than ordinary solder so use caution not to let solder bridges occur such as on IC pins, etc.
- Usable with ordinary solder
  It is best to use only unleaded solder but unleaded solder may also be added to ordinary solder.

RELEASING THE DISC TRAY LOCK

The disc tray lock function for the antitheft of an demonstration disc in the store is equipped.

Releasing Procedure :
Press two buttons of [⏏] and [■] simultaneously for five seconds. The message "UNLOCKED" is displayed and the tray is unlocked.

Note: When "LOCKED" is displayed, the tray lock is not released by turning power on/off with the [I/⏻] button.

NOTE OF REPLACING THE DMB10 BOARD

New part of EEPROM (IC103) on the DMB10 board cannot be used. Therefore, if the mounted DMB10 board is replaced, exchange new EEPROM with that used before the replacement.

RELEASING THE DEMO PLAY LOCK

Releasing Procedure:
Press two buttons of [►] and [■] .
The message "DEMO OFF".

NOTE OF HANDLING THE MIB01 BOARD (Part No. A-1124-106-A)

When the MIB01 board is replaced by a repair for a fee, throw away the MIB01 board after obtaining consent of not returning of the MIB01 board to the customer. When throwing away the MIB01 board, be sure to throw away after destroying IC602 physically with the hammer etc.

• MODEL IDENTIFICATION

– Back Panel –

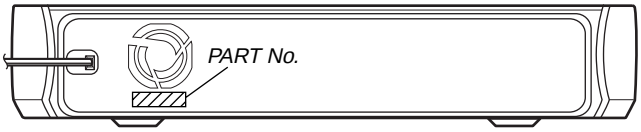

MODEL	PART No.
US and Canadian model	2-588-835-0□
AEP and UK model	2-588-835-1□
Russian model	2-588-835-2□
Singapore model	2-588-835-4□

S-FORCE FRONT SURROUND OPERATION CHECK

When complaint by the effect of the sound field, check as follows and confirm abnormality is not found in the set.

Procedure:

1. Press ⏏ to load the Setup Disc on the tray, then press ⏏.
The Setup Disc menu appears.

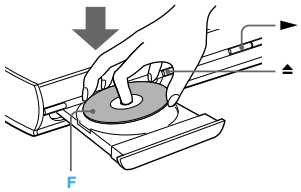

2. Sit in the listening position, then select one of the three options on the screen using ←/→, and press ► or ENTER.
The selected option starts.

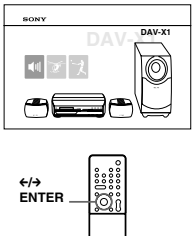

3. Position the speakers for the best sound effect.
Listening carefully to how the option sounds to determine the best position for the speakers. If a satisfactory surround sound effect cannot be achieved, adjust the speaker positions.

Hint

- Ⓐ Place both front speakers the same distance apart as they are from the listening position (to form an equilateral triangle).
- Ⓑ The front speakers should be placed at least 0.6 m (2 ft) apart.
- Ⓒ The front speakers should be placed at ear level in the listening position.
- Ⓓ Place the front speakers forward of the TV. Make sure there are no reflecting obstacles in front of the speakers.
- Ⓔ Both front speakers should be pointed straight forward. Do not place the speakers at an angle.
- Ⓕ Do not leave a space in front of the front speakers when placed on a table or rack, etc., as reflection may occur.

Note

- Even if an option is selected, the sound volume of the subwoofer may be low.This is by default setting, and is not a malfunction.
- The effective area of surround sound will vary depending on the sound field selection (FOCUS SURROUND or WIDE SURROUND). You can change the sound field settings for optimal front surround sound effect. For details, see "System Sound Feature" of the Operating Instructions.

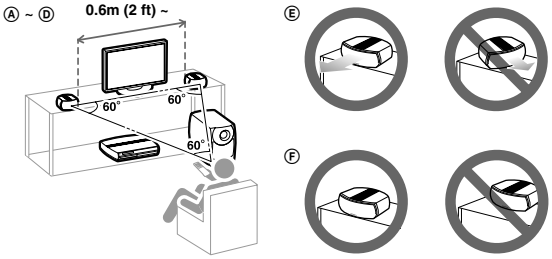

4. Press ■ to stop the disc, then press ⏏ to eject the disc.

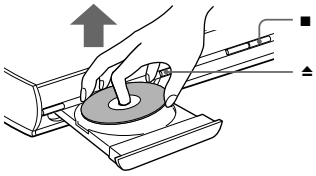

Note: Follow the disassembly procedure in the numerical order given.

HOW TO OPEN THE LOADING ASSY PANEL WHEN POWER SWITCH TURNS OFF

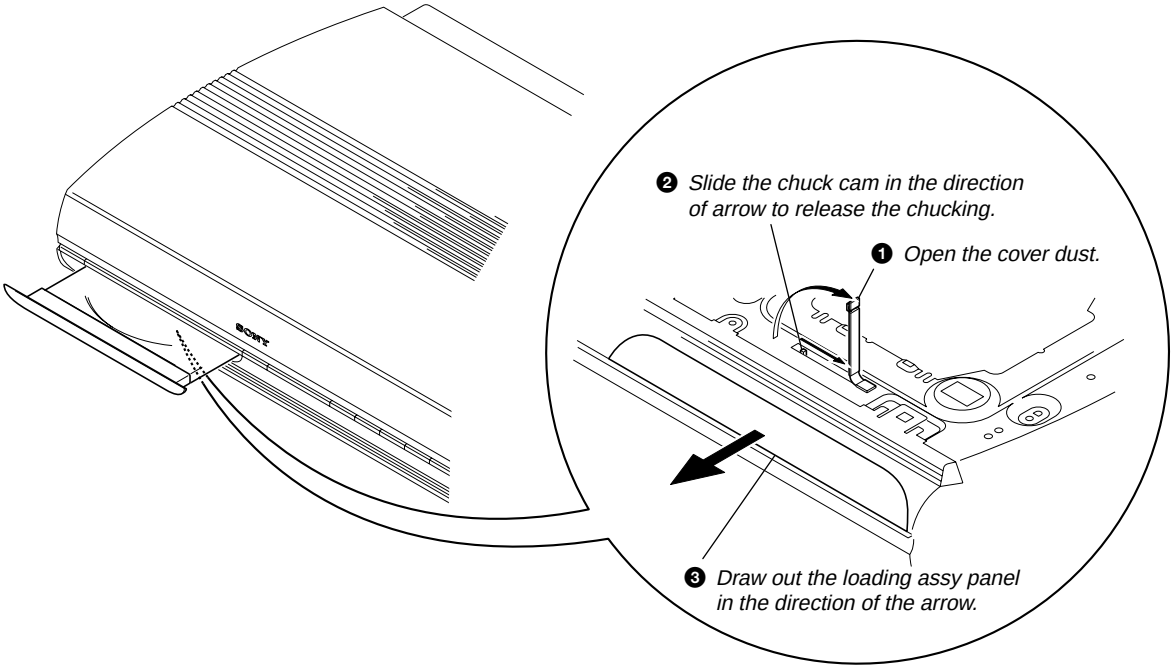

DMB10 BOARD SERVICE POSITION

- In checking the DMB10 board, prepare four extension jigs (Part No. J-2501-239-A: 1.00 mm Pitch, 5 cores, Length 300 mm, Part No. J-2501-242-A: 1.00 mm Pitch, 11 cores, Length 300 mm and Part No. J-2501-280-A: 5 cores, Length 300 mm).

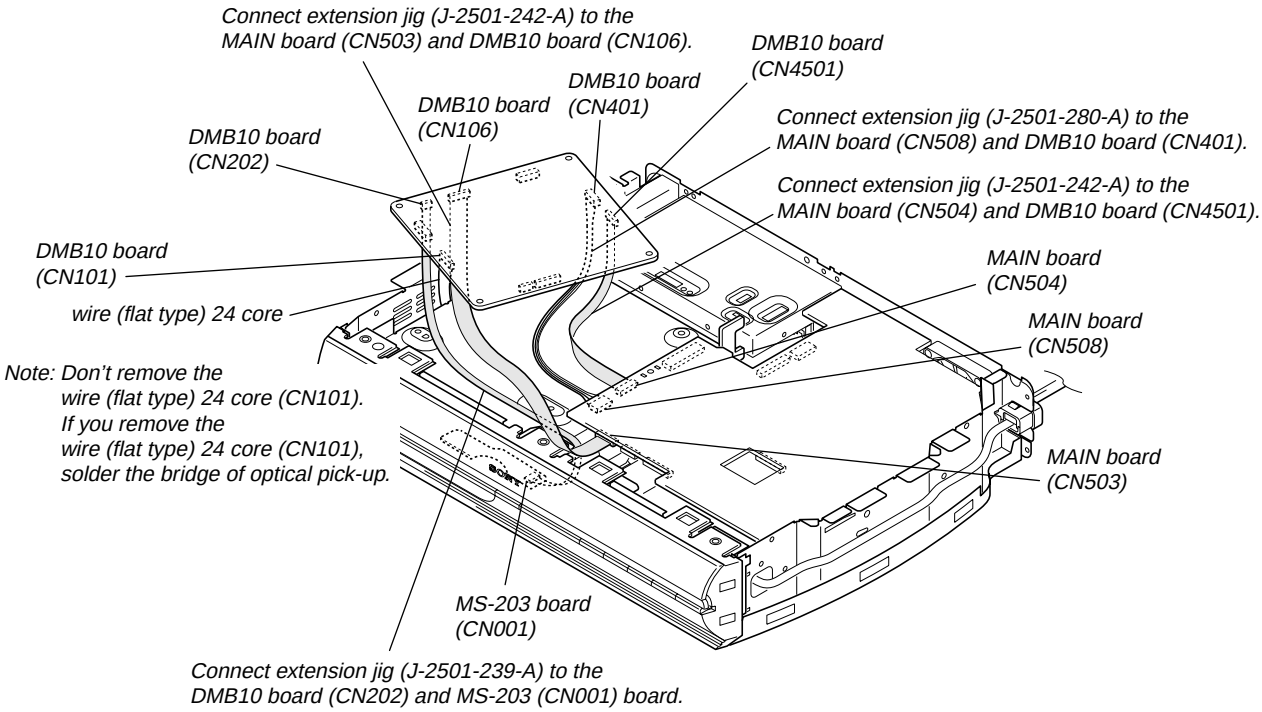

MAIN BOARD SERVICE POSITION

- In checking the MAIN board, prepare two extension jigs (Part No. J-2501-243-A: 1.00 mm Pitch, 17 cores, Length 300 mm and Part No. J-2501-244-A: 1.00 mm Pitch, 21 cores, Length 300 mm).

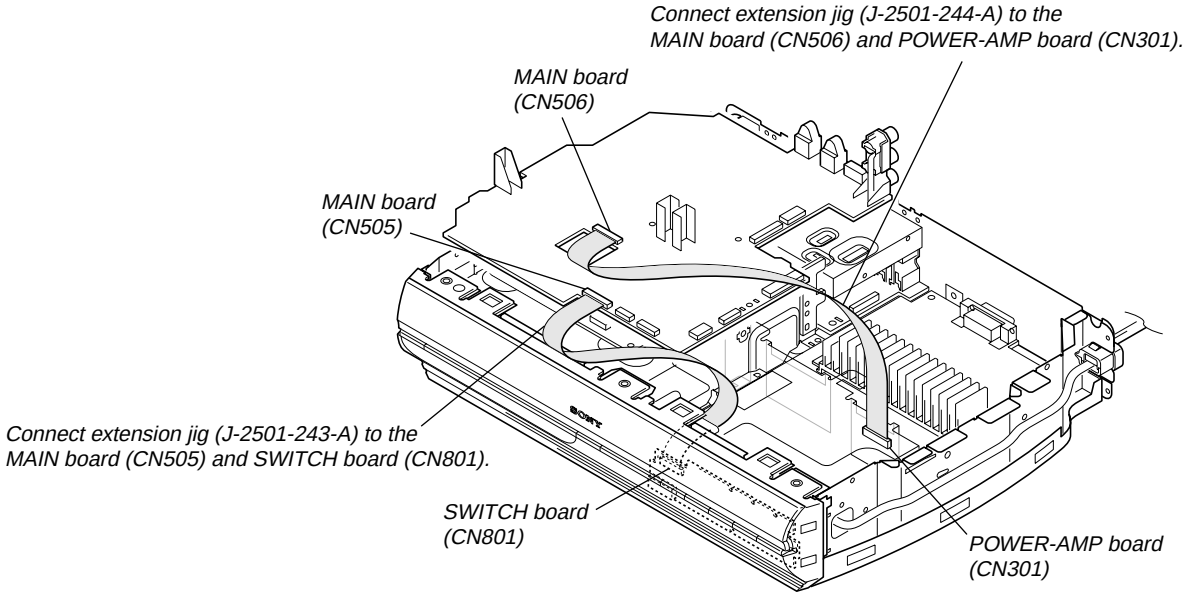

MIB01 BOARD (US, Canadian MODELS) SERVICE POSITION

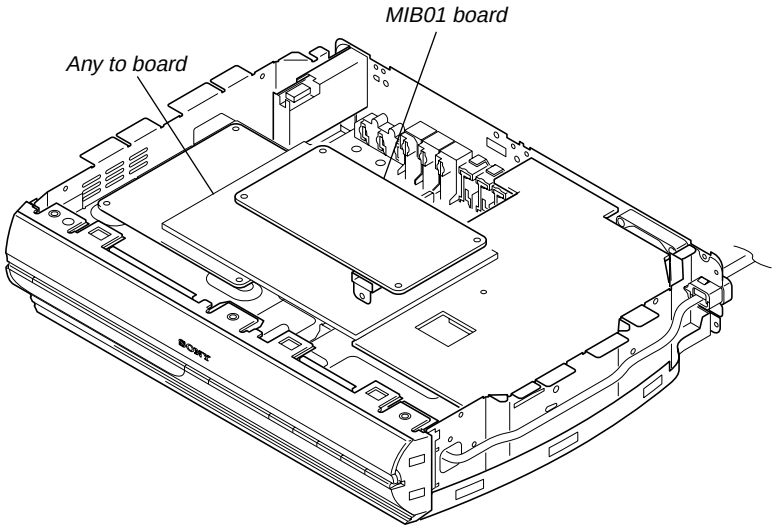

FRONT PANEL SECTION SERVICE POSITION

- In checking the front panel section, prepare extension jig (Part No. J-2501-243-A: 1.00 mm Pitch, 17 cores, Length 300 mm).

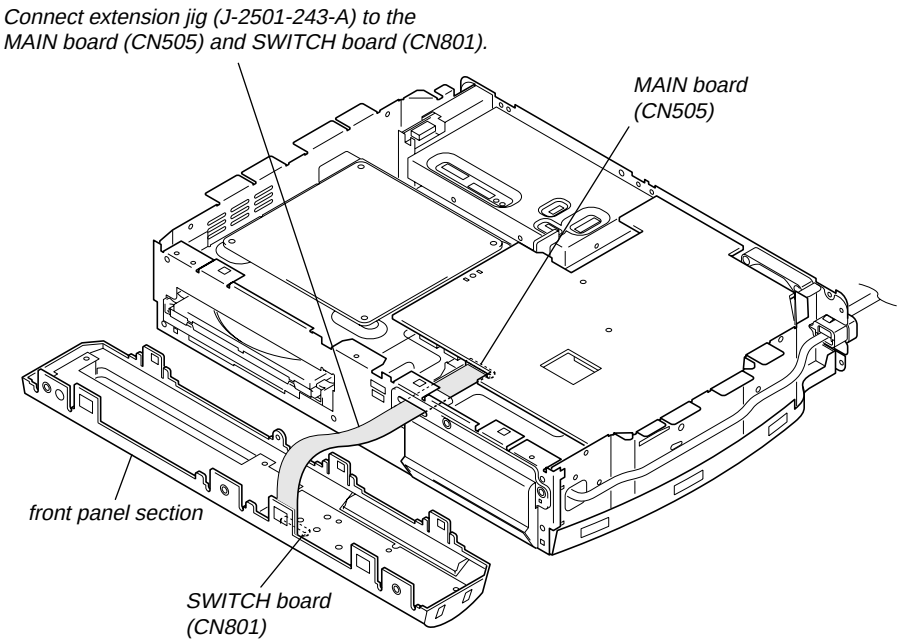

POWER-AMP BOARD SERVICE POSITION

- In checking the POWER-AMP board, prepare extension jig (Part No. J-2501-244-A: 1.00 mm Pitch, 21 cores, Length 300 mm).

Note: Remove the MAIN Board once, and then remove the POWER-AMP board.
After that, reinstall the MAIN Board and set this service position.

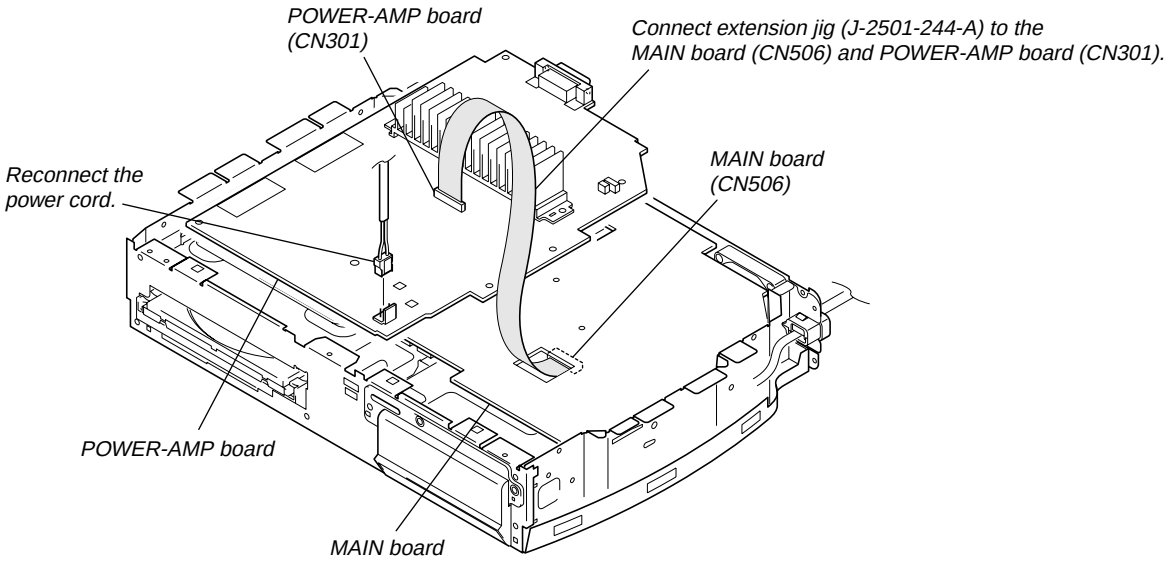

SECTION 2
GENERAL

This section is extracted from instruction manual.

Front panel

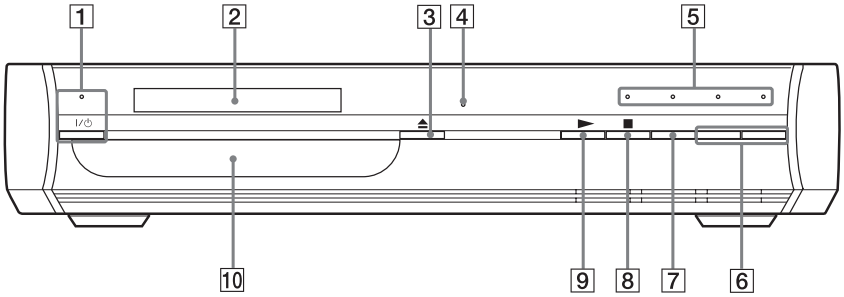

1 **I/⏻ (on/standby indicator)**
2 **Front panel display**
3 **⏏ (open/close)**
4 **Remote sensor**
5 **Sound Field indicator**
6 **VOLUME –/+**
7 **FUNCTION**
8 **■ (stop)**
9 **► (play)**
10 **Disc tray**

Rear panel (US, Canadian, Singapore models)

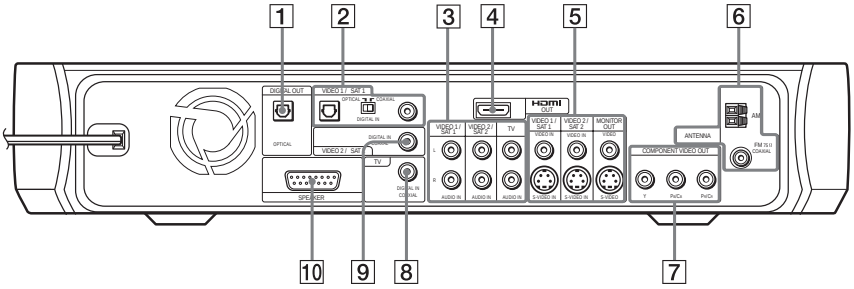

1 **DIGITAL OUT OPTICAL jack**
2 **VIDEO 1/SAT 1 DIGITAL IN (OPTICAL/ COAXIAL) jacks**
3 **AUDIO IN L/R (VIDEO 1/SAT1, VIDEO 2/ SAT 2, TV) jacks**
4 **HDMI OUT jack (US, Canadian models only)**
5 **VIDEO/S-VIDEO IN (VIDEO 1/SAT 1, VIDEO 2/SAT 2, VIDEO/S-VIDEO OUT (MONITOR OUT)) jacks**
6 **ANTENNA (AM terminal/FM 75 Ω COAXIAL jack)**
7 **COMPONENT VIDEO OUT (Y, P_B/C_B, P_R/ C_R) jacks**
8 **TV DIGITAL IN COAXIAL jack**
9 **VIDEO 2/SAT 2 DIGITAL IN (COAXIAL) jack**
10 **SPEAKER jack**

Rear panel (AEP, UK, Russian models)

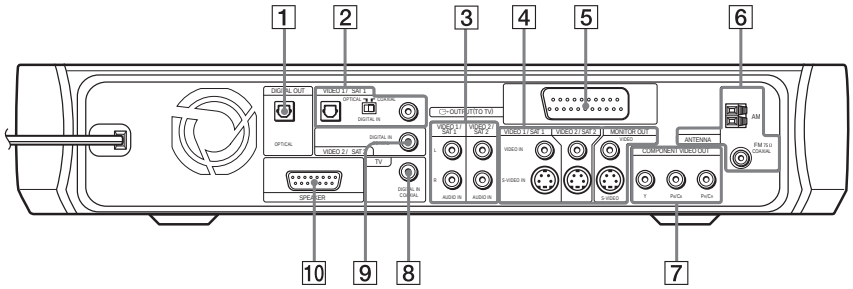

1 **DIGITAL OUT OPTICAL jack**
2 **VIDEO 1/SAT 1 DIGITAL IN (OPTICAL/COAXIAL) jacks**
3 **AUDIO IN L/R (VIDEO 1/SAT1, VIDEO 2/SAT 2, TV) jacks**
4 **VIDEO/S-VIDEO IN (VIDEO 1/SAT 1, VIDEO 2/SAT 2, VIDEO/S-VIDEO OUT (MONITOR OUT)) jacks**
5 **EURO AV ⇨ OUTPUT (TO TV) jack**
6 **ANTENNA (AM terminal/FM 75 Ω COAXIAL jack)**
7 **COMPONENT VIDEO OUT (Y, PB/CB, PR/CR) jacks**
8 **TV DIGITAL IN COAXIAL jack**
9 **VIDEO 2/SAT 2 DIGITAL IN (COAXIAL) jack**
10 **SPEAKER jack**

Remote

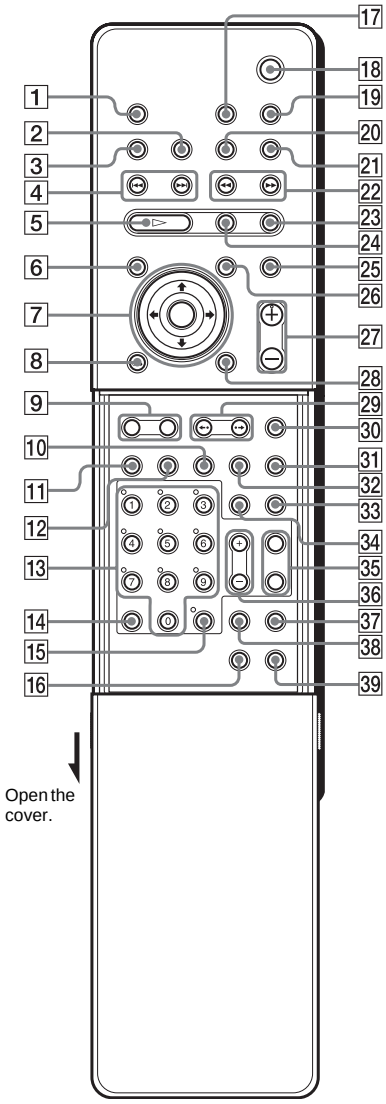

1 **TV**
2 **SLEEP**
3 **SOUND FIELD**
4 **⏮/⏭ PRESET –/+, TV CH –/+**
5 **▷ (play)**
The ▷ button has a tactile dot.*
6 **TOP MENU**
7 **←/↑/↓/→/ENTER**
←/↑/↓/→ have tactile dots.*
8 **RETURN**
9 **ALBUM –/+**
10 **ANGLE**
11 **AUDIO**
The AUDIO button has a tactile dot.*
12 **SUBTITLE**
13 **Number buttons**
The number 5 button has a tactile dot.*
14 **CLEAR,** -/--
15 **ENTER**
16 **PROGRESSIVE, TUNER MENU**
17 **TV I/⏻ (on/standby)**
18 **I/⏻ (on/standby)**
19 **THEATRE SYNC**
20 **TV/VIDEO**
21 **FUNCTION**
22 **◀◀/▶▶ ◀I/I▶ SLOW, TUNING –/+**
23 **■ (stop)**
24 **❚❚ (pause)**
25 **MUTING**
26 **MENU**
27 **VOLUME, TV VOL +/–**
The VOLUME, TV VOL + button has a tactile dot.*
28 **DISPLAY**
29 **←•/◀II/•→/II▶ REPLAY, ADVANCE, STEP**
30 **DISPLAY**
31 **WOOFER**
32 **PICTURE NAVI**
33 **REPEAT**
34 **FM MODE**
35 **TV CH –/+**
The TV CH + button has a tactile dot.*
36 **TV VOL +/–**
37 **NIGHT**
38 **SA-CD/CD**
39 **AMP MENU**

* Use the tactile dot as a reference when operating the system.

SECTION 3
DISASSEMBLY

- This set can be disassembled in the order shown below.

3-1. DISASSEMBLY FLOW

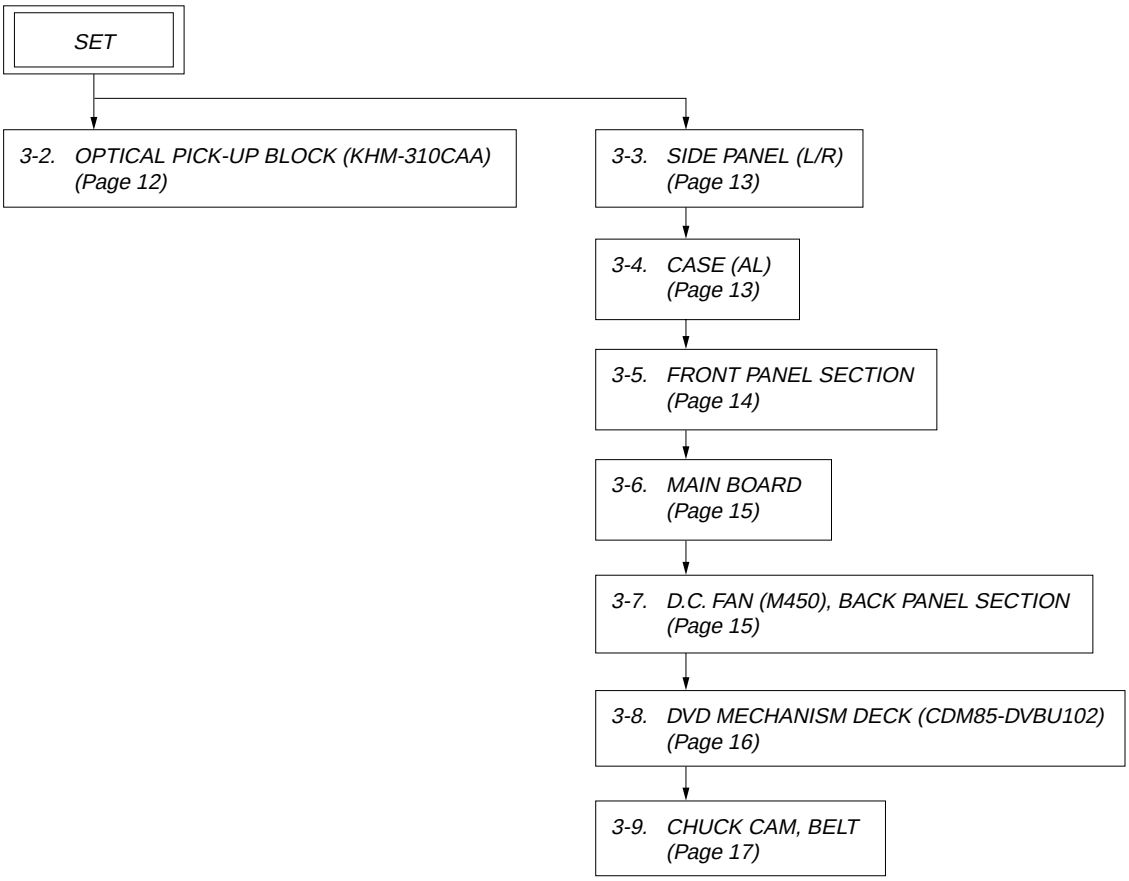

Note: Follow the disassembly procedure in the numerical order given.

3-2. OPTICAL PICK-UP BLOCK (KHM-310CAA)

Note: The Cover (CDM) on the bottom of the set can be removed when replacing the Optical Pick-up Block KHM-310CAA.

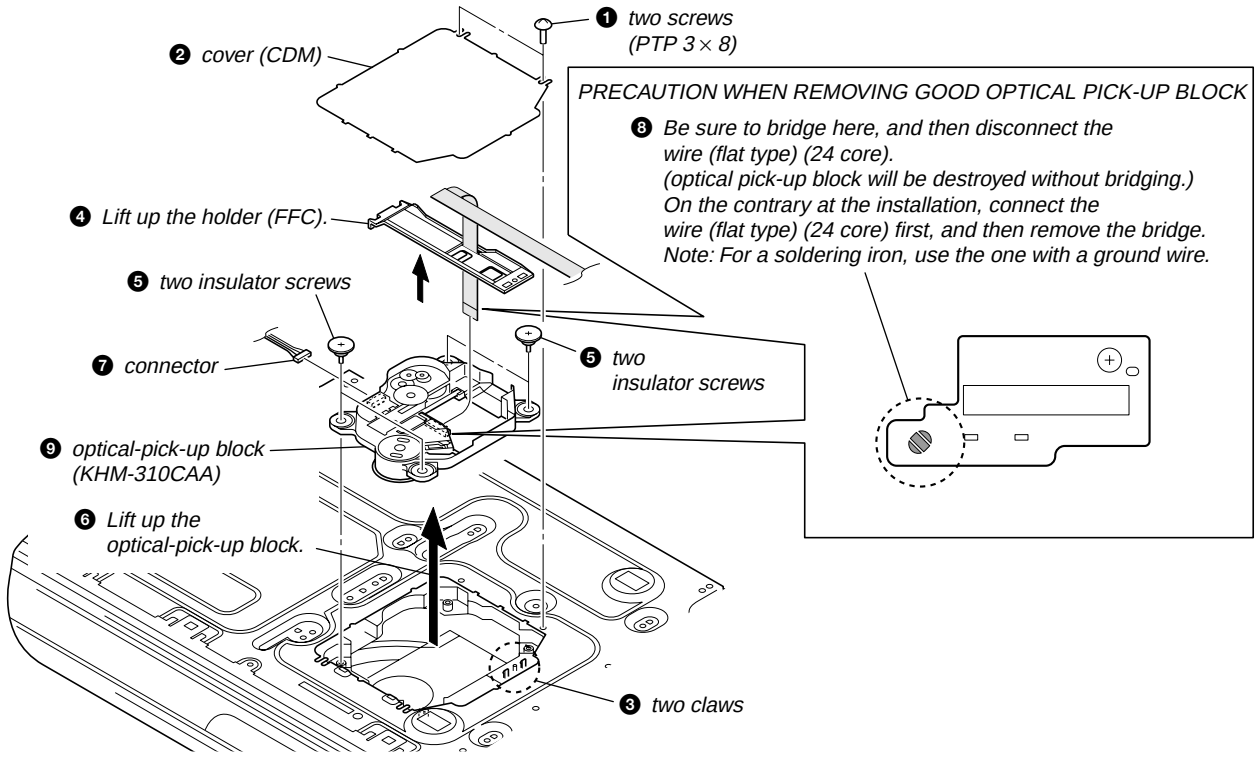

3-3. SIDE PANEL (L/R)

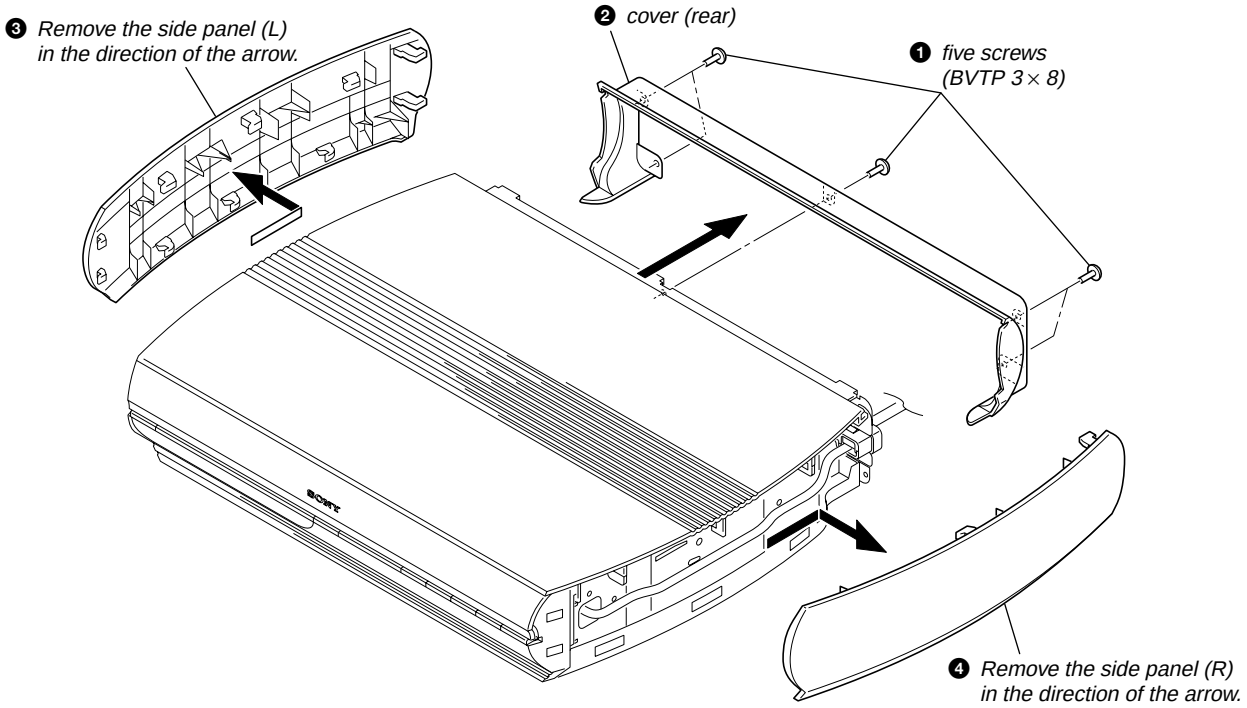

3-4. CASE (AL)

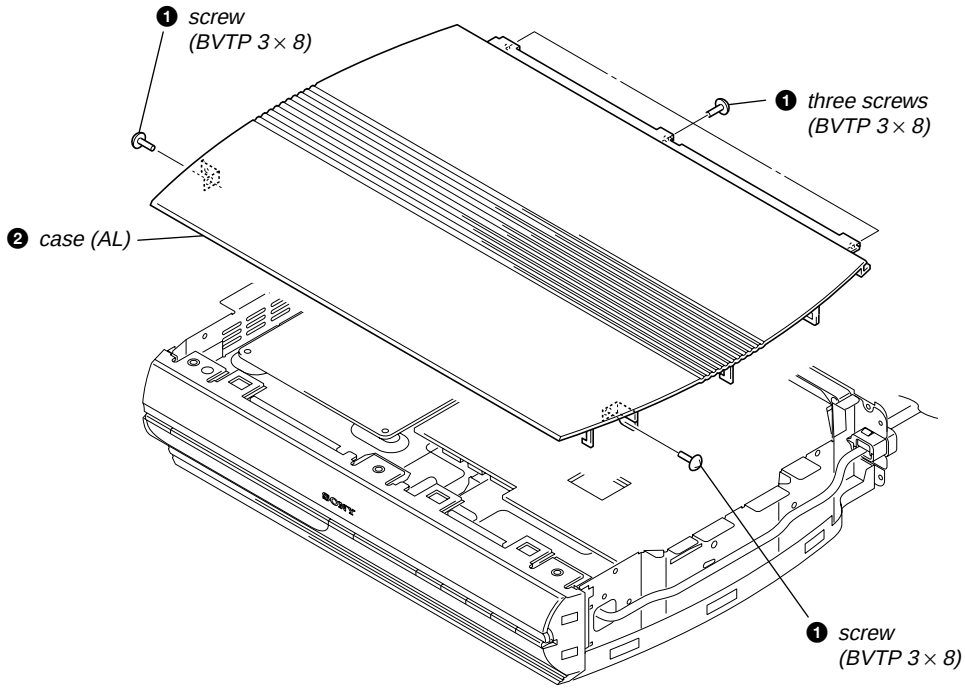

3-5. FRONT PANEL SECTION

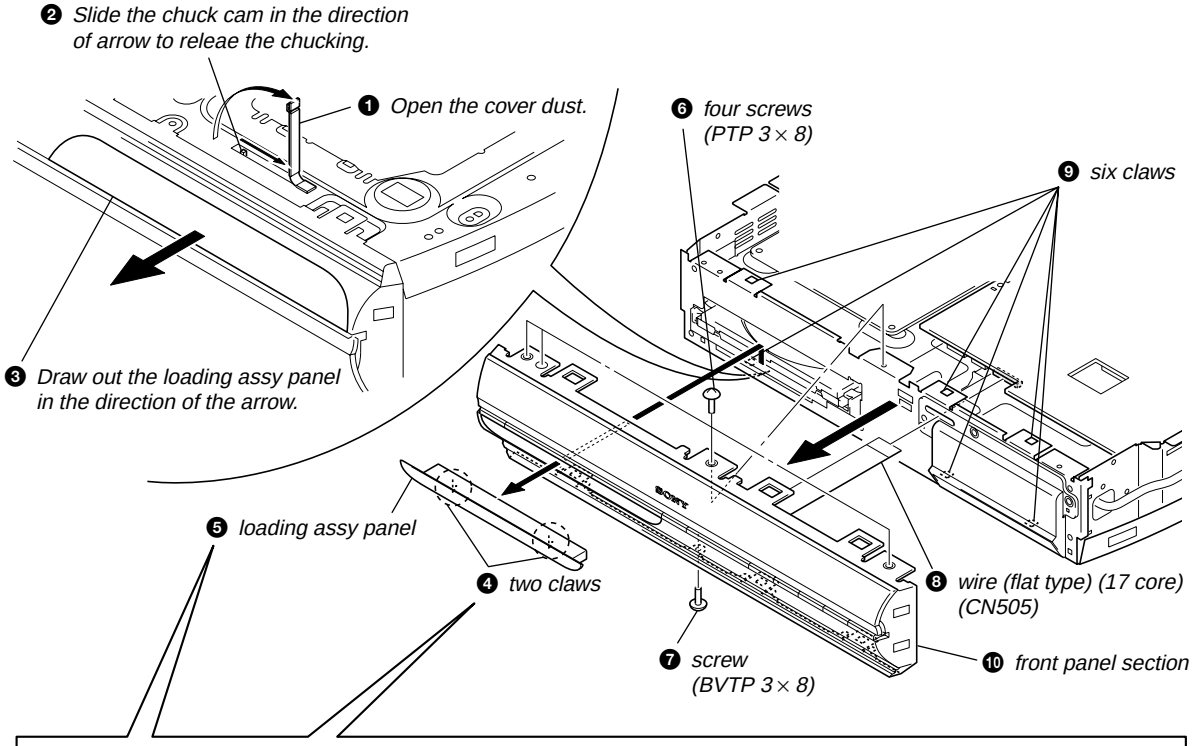

– NOTE WHEN LOADING ASSY PANEL IS REMOVED –

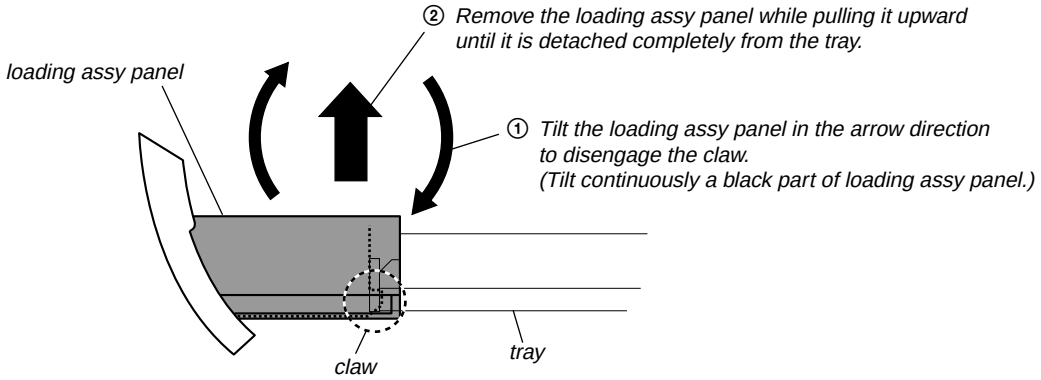

– NOTE WHEN LOADING ASSY PANEL IS INSTALLED –

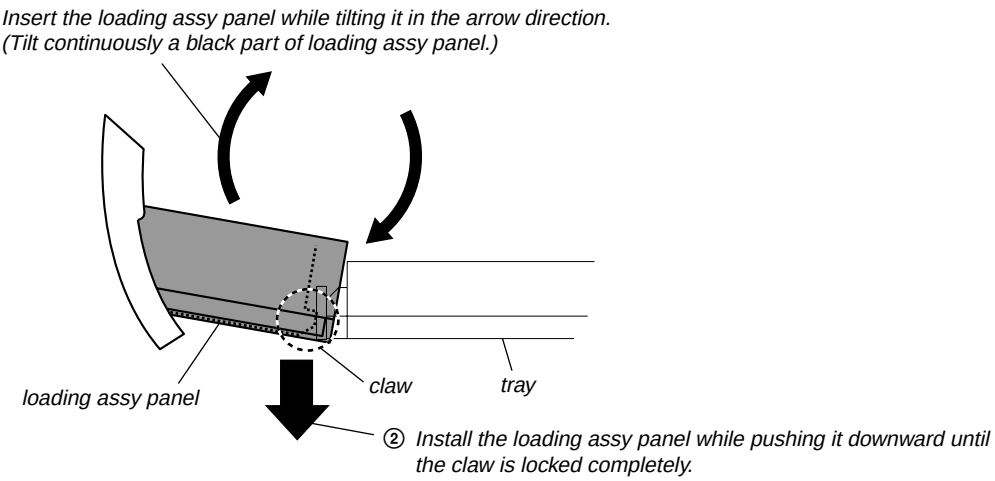

3-6. MAIN BOARD

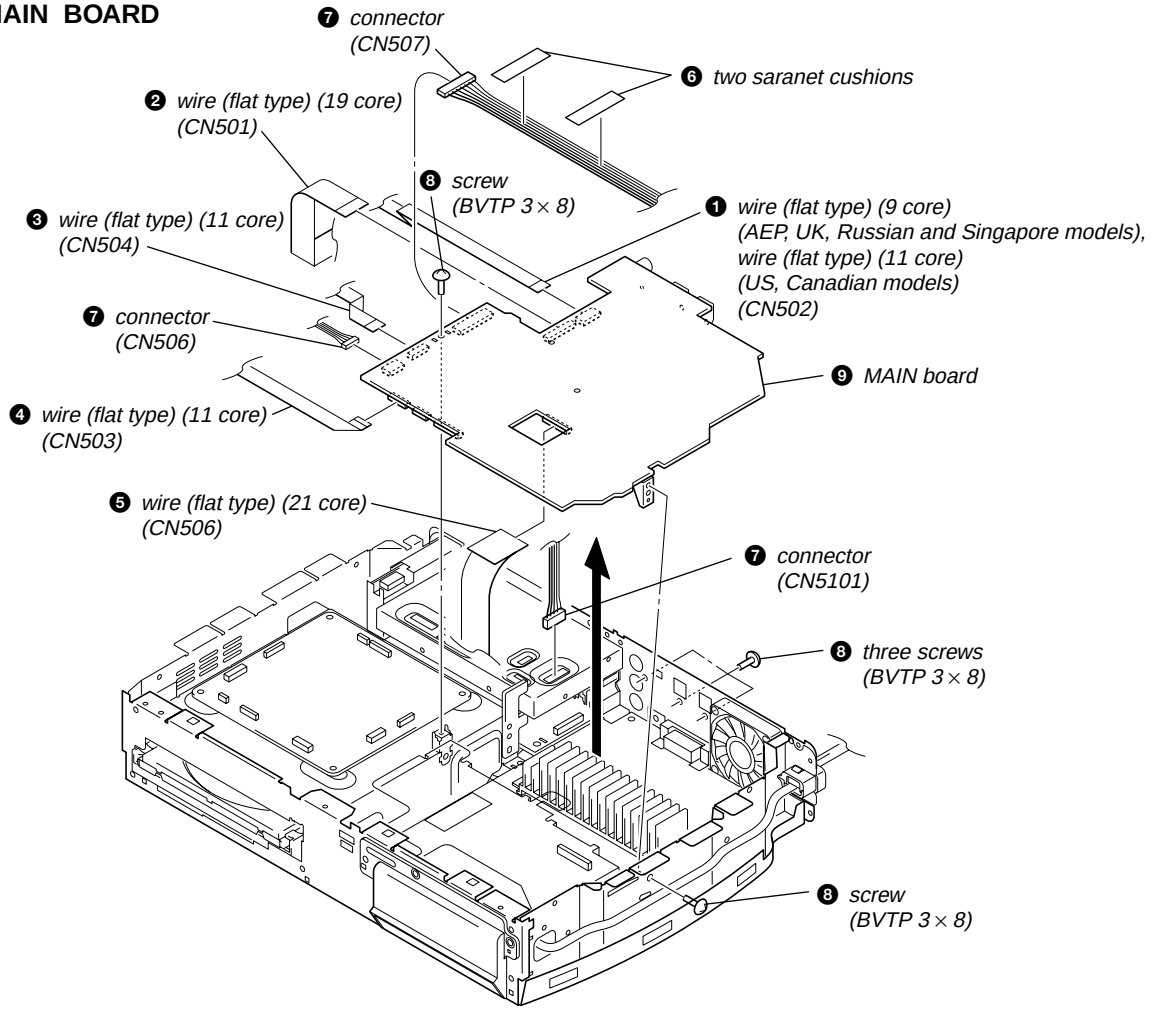

3-7. D.C. FAN (M450), BACK PANEL SECTION

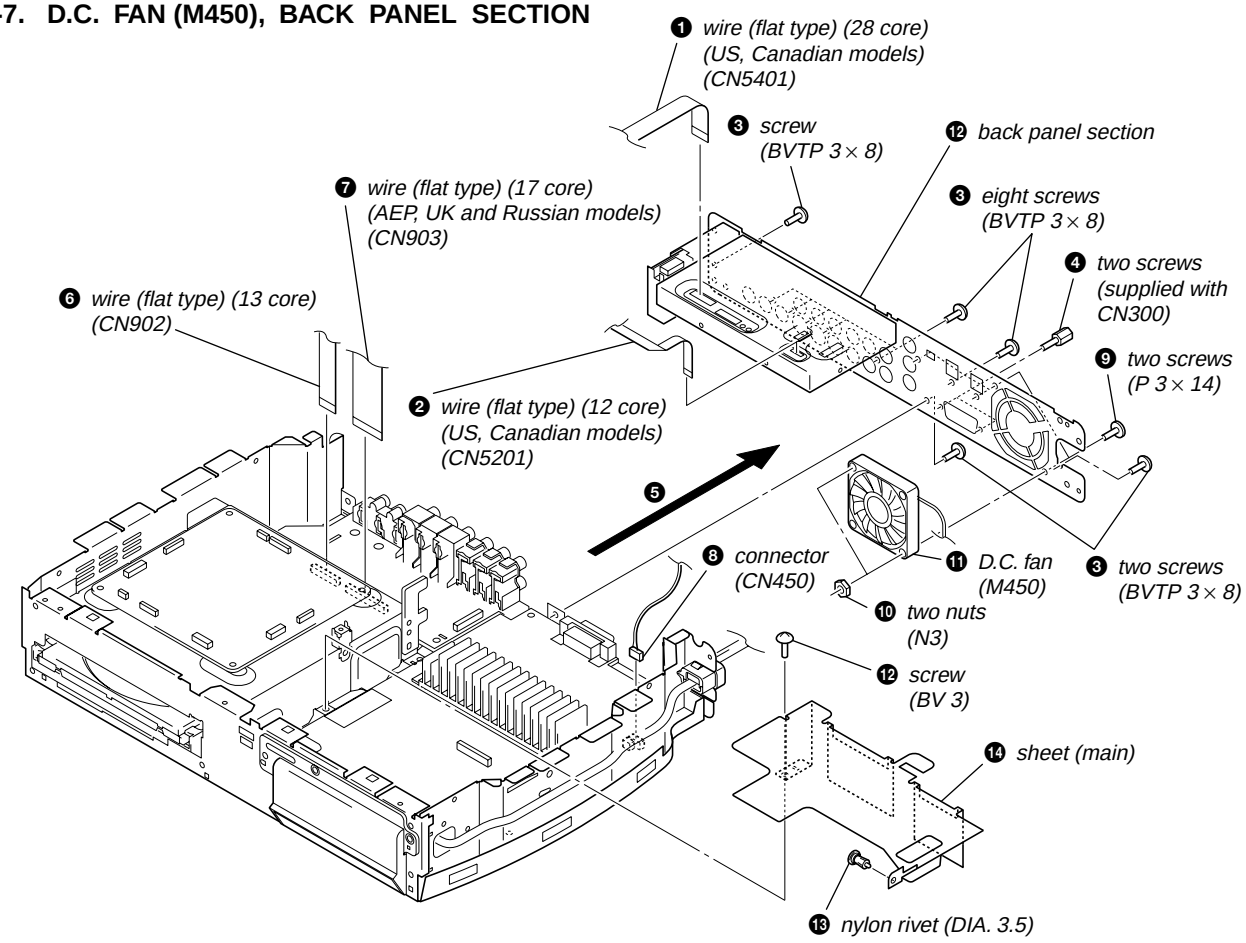

3-8. DVD MECHANISM DECK (CDM85-DVBU102)

PRECAUTION WHEN REMOVING GOOD OPTICAL PICK-UP BLOCK

Be sure to bridge here, and then disconnect the wire (flat type) (24 core).
(optical pick-up block will be destroyed without bridging.)
On the contrary at the installation, connect the wire (flat type) (24 core) first, and then remove the bridge.
Note: For a soldering iron, use the one with a ground wire.
(Refer to DISASSEMBLY 3-2. OPTICAL PICK-UP BLOCK (KHM-310CAA))

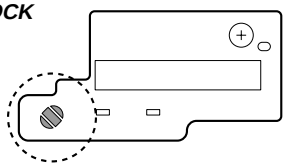

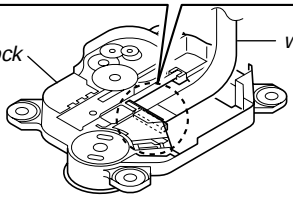

PRECAUTION WHEN REPLACING DVD MECHANISM DECK (CDM85-DVBU102)

❶ *Perform work with this wire (flat type) (24 core) connected, or make a bridge as mentioned above and then disconnect the wire (flat type) (24 core). (optical pick-up will be destroyed without bridging.) On the contrary at the installation, connect the wire (flat type) (24 core) first, and then remove the bridge. Note: For a soldering iron, use the one with a ground wire.*

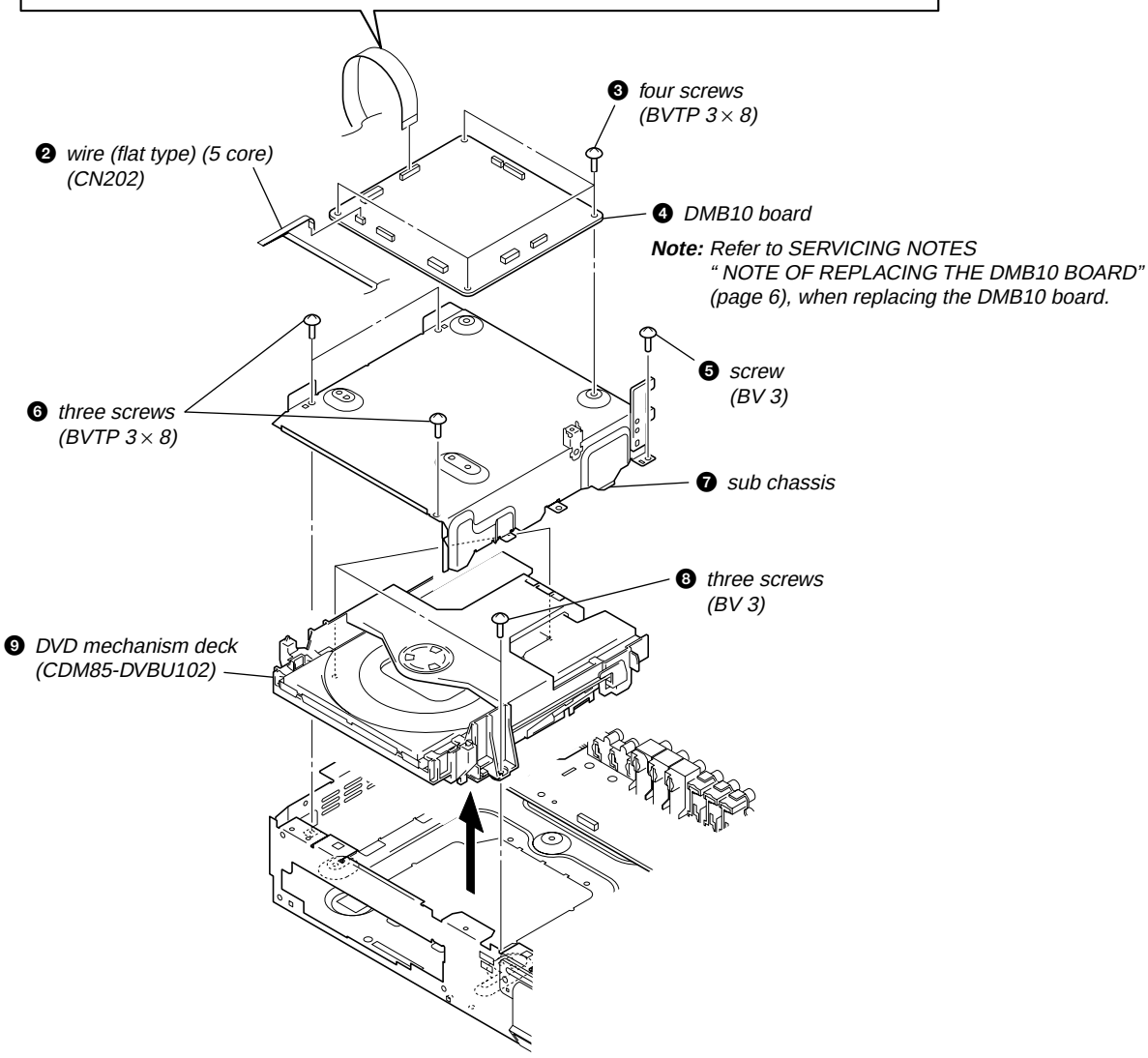

3-9. CHUCK CAM, BELT

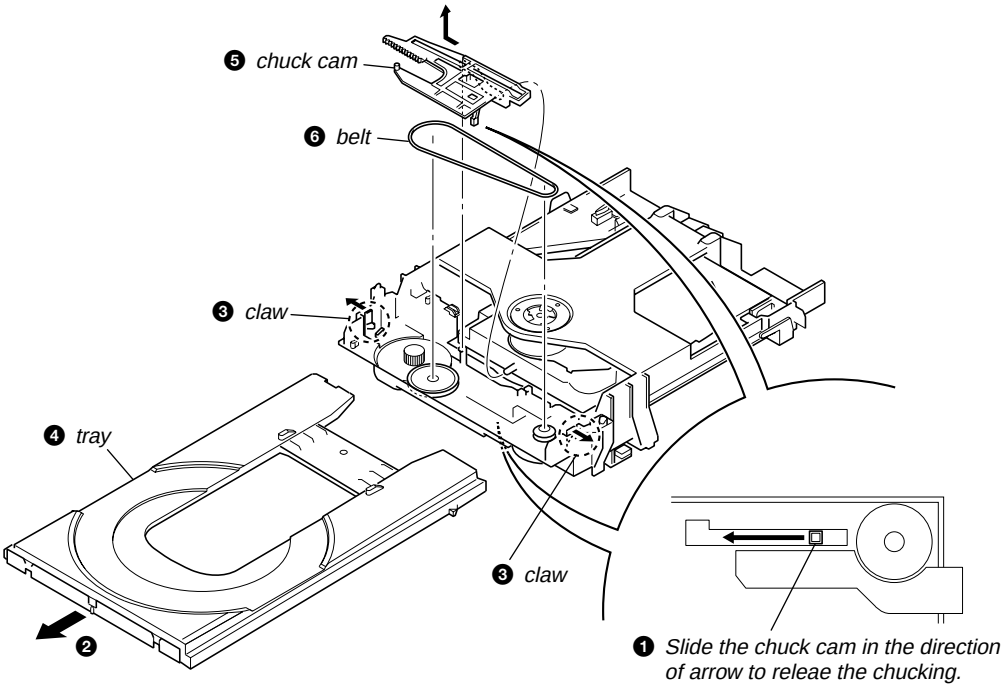

SECTION 4
TEST MODE

COLD RESET

The cold reset clears all data including preset data stored in the RAM to initial conditions. Execute this mode when returning the set to the customers.

Procedure:

1. Set to the standby mode.
2. Press three buttons of [I/⏻] , [FUNCTION] and [VOLUME –] simultaneously.
3. The message "COLD RESET" is displayed on the fluorescent indicator tube, then becomes standby mode.

PANEL TEST MODE

This mode is used to check the fluorescent indicator tube, LED, model, destination, software version and key.

Procedure:

1. Press three buttons of [■] , [FUNCTION] and [VOLUME +] simultaneously.
2. All LEDs and segments in fluorescent indicator tube are lighted up.
3. When you want to enter the software version display mode, press the [VOLUME –]. The model name is displayed.
4. Each time [VOLUME –] is pressed, the display changes from destination, MC version, SYS version, UI version, DVD version, ST version, TA version, TM version in this order, and returns to the model name display.
5. When [FUNCTION] button is pressed while the version numbers are being displayed except model name and destination, the date of the software creation appear. When [FUNCTION] button is pressed again, the display returns to the software version display. When [VOLUME –] is pressed while the date of the software creation is being displayed, the date of the software creation is displayed in the same order of software version display.
6. Press the [►] button, the key check mode is activated.
7. In the key check mode, the fluorescent indicator tube displays "K 0". Each time a button is pressed, "K 0" value increases. However, once a button has been pressed, it is no longer taken into account.
8. To release from this mode, press three buttons in the same manner as step 1 or disconnect the power cord.

SHIP MODE

This mode moves the optical pick-up to the position durable to vibration. Use this mode when returning the set to the customer after repair.

Procedure:

1. Press the [I/⏻] button to turn the power on.
2. Press the [FUNCTION] button to select the "DVD".
3. Press two buttons [I/⏻] and [■] simultaneously.
4. The message "MECHA LOCK" is displayed on the fluorescent indicator tube and the ship mode is set.

PRODUCT OUT

This mode moves the optical pick-up to the position durable to vibration and clears all data including preset data stored in the RAM to initial conditions. Use this mode when returning the set to the customer after repair.

Procedure:

1. Set the DVD service mode. (See page 19)
2. Press the [4] key of the remote commander, and set the "Version Information".
3. Press the [DVD MENU] key of the remote commander.
4. Press the [CLEAR] key of the remote commander, the message "Initialize all data" → "Complete" are displayed on the fluorescent indicator tube.
5. Press the [I/⏻] button to turn the power off.
6. Press the [I/⏻] button to turn the power on.
7. Press the [FUNCTION] button to select the "DVD".
8. Press three buttons of [I/⏻] , [⏏] and [VOLUME –] simultaneously.
9. After the "STANDBY" blinking display finish, the message "MECHA LOCK" is displayed on the fluorescent indicator tube and the ship mode is set.

TUNER STEP CHANGE (US, Canadian and Singapore Models)

The step interval of AM channels can be toggled between 9 kHz and 10 kHz.

Procedure:

1. Press the [I/⏻] button to turn the power on.
2. Press the [FUNCTION] button to select the "TUNER AM".
3. Press the [I/⏻] button to turn the power off.
4. Press two buttons of [I/⏻] and [FUNCTION] simultaneously. The set power on automatically. The message "AM 9k Step" or AM10k Step" displayed on the fluorescent indicator tube and thus the channel step is changed.

COLOR SYSTEM CHANGE (Singapore Model)

This mode let you change the color system of the video output from PAL to NTSC or vice-versa.

Procedure:

1. Press the [I/⏻] button to turn the power on.
2. Press the [FUNCTION] button to select the "DVD".
3. Press the [I/⏻] button to turn the power off.
4. Press two buttons of [I/⏻] and [VOLUME –] simultaneously.
5. The message "COLOR PAL" or "COLOR NTSC" will be displayed on the fluorescent indicator tube

DSP SRAM CHECK

Procedure:

1. Press the [I/⏻] button to turn the power on.
2. Press three buttons of [■] , [►] and [FUNCTION] simultaneously.
3. The message "RAM OK" (IC507 on the MAIN board is normal) or "RAM NG" (IC507 on the MAIN board is abnormal) will be displayed on the fluorescent indicator tube.

DVD SECTION

1. DVD SERVICE MODE GENERAL DESCRIPTION

The Mirror Time and IOP measurement allows you to make diagnosis and adjustment simply by using the remote commander and monitor TV. The instructions, diagnosis results, etc. are given on the on-screen display (OSD).

2. STARTING DVD SERVICE MODE

1. Press the I/⏻ button to turn the power on.
2. Press the FUNCTION button to select the "DVD".
3. Press three buttons ■ , ⏏ and VOLUME + simultaneously.
4. The message "SERVICE IN" will be displayed on the fluorescent indicator tube and the Rimocon Diagnosis Menu is displayed on the on-screen display on the monitor TV as follows. The model name, IF-con version and Syscon version is displayed at the bottom of the on-screen display.

```
        Remocon Diagnosis Menu

0. External Chip Check
1. Servo Parameter Check
2. Drive Manual Operation
3. Emergency History
4. Version Information
5. Video Level Adjustment


Model Name :xxxx
IF-con     :Ver.xx.xx (xxxx)
Syscon     :Ver.x.xxx
```

5. To execute each function, press its number by using numeric button on the remote commander (RM-ADP004).
6. To release from this mode, press the I/⏻ button to turn the power off.

3. DRIVE MANUAL OPERATION

The Drive Manual Operation menu consists of five main function. On the Remocon Diagnosis Menu screen, press 2 button on the remote commander, and the following Drive Manual Operation menu will be displayed.

```
         Drive Manual Operation

1. Servo Control
2. Track/Layer Jump
3. Manual Adjustment
4. Tray Aging Mode
5. MIRR time Adjust
0. Return to Top Menu
```

4. MIRROR TIME ADJUSTMENT

On the Drive Manual Operation menu screen, press 5 button on the remote commander, and the following MIRR time Adjust Menu will be displayed.

```
         MIRR time Adjust Menu

1. CD MIRR time Check:
2. DVD MIRR time Check:
3. Threshold:
4. Save to EEPROM
5. Default set MIRR time




[Open]Tray open [Close]Tray close
[0]Return to previous menu
```

There are five main commands in the Mirr time Adjust menu. The functions of each command are described in the following page.

1. CD MIRR time Check
This command checks the Mirror time value for CD disc.

2. DVD MIRR time Check
This command checks the Mirror time value for DVD disc.

3. Threshold
This command displays the threshold value between CD and DVD mirror time.

4. Save to EEPROM
This command saves an adjusted mirror time value to the EEPROM.

5. Default set MIRR time
This command will set CD and DVD mirror time to firmware default value.

[Open] / [Close]
Pressing the ⏏ button controls the tray for disc change during mirror time adjustment.
[0] Return to previous menu
Press the 0 button on the romote commander to return to previous menu.

EXECUTING MIRROR TIME ADJUSTMENT

In order to execute mirror time adjustment, the following standard procedures must be followed.

1. Set to the MIRR time Adjust Menu mode.
2. Press the 5 button on the romote commander to select the "5. Default set MIRR time".
3. Press the 3 button on the romote commander to select the "3. Threshold".
4. Check the value of Threshold on the screen. If it is 75, go to next step. If it is not so, return to step 2.

```
        MIRR time Adjust Menu

1. CD MIRR time Check:
2. DVD MIRR time Check:
3. Threshold:75
4. Save to EEPROM
5. Default set MIRR time




[Open]Tray open [Close]Tray close
[0]Return to previous menu
```

5. Insert the DVD test disc (HLX-504) (Part No. J-6090-088-A).
6. Press the [2] button on the romote commander to select the "2. DVD MIRR time Check".
7. Wait for hexadecimal value to display on the screen.
8. Check the value (##) of DVD MIRR time on the screen. If ## is 28 to 70, go to next step. If it is not so, return to step 5.

```
        MIRR time Adjust Menu

1. CD MIRR time Check:
2. DVD MIRR time Check: $$ ##
3. Threshold:
4. Save to EEPROM
5. Default set MIRR time




[Open]Tray open [Close]Tray close
[0]Return to previous menu
```

9. Press the [4] button on the romote commander to select the "4. Save to EEPROM".
10. Check that $$ is the same as the value of ## on the screen. If it is not so, return to step 5.
11. Take out the DVD test disc (HLX-504) and insert the CD test disc (YEDS-18) (Part No. 3-703-998-01).
12. Press the [1] button on the romote commander to select the "1. CD MIRR time Check".
13. Wait for hexadecimal value to display on the screen.
14. Check the value (@@) of DVD MIRR time on the screen. If @@ is 5A to E8, go to next step. If it is not so, return to step 11.

```
        MIRR time Adjust Menu

1. CD MIRR time Check: && @@
2. DVD MIRR time Check: $$ ##
3. Threshold:
4. Save to EEPROM
5. Default set MIRR time




[Open]Tray open [Close]Tray close
[0]Return to previous menu
```

15. Press the [4] button on the romote commander to select the "4. Save to EEPROM".
16. Check that && is the same as the value of @@ on the screen. If it is not so, return to step 11.
17. Take out the CD test disc (YEDS-18).
18. Release the MIRR time Adjust Menu mode.

5. EXECUTING IOP MEASUREMENT

In order to execute IOP measurement, the following standard procedures must be followed.

1. Set to the Drive Manual Operation mode.
2. Press the [3] button on the romote commander, and the following Manual Adjust menu will be displayed.

```
            Manual Adjust
1. Track Balance Adjust:
2. Track Gain Adjust:
3. Focus Balance Adjust:
4. Focus Gain Adjust:
5. Eq Boost Adjust:
6. Iop:
7. TRV. Level:
8. S curve(FE) Level:
9. RFL(PI) Level:
0. MIRR Time:
↓↑ Change Value
[RETURN]Return to previous menu
```

3. Press the [6] button on the romote commander to select the "6. Iop".
4. Wait for hexadecimal Value to display on the screen.

```
            Manual Adjust
1. Track Balance Adjust:
2. Track Gain Adjust:
3. Focus Balance Adjust:
4. Focus Gain Adjust:
5. Eq Boost Adjust:
6. Iop: YY ZZ
7. TRV. Level:
8. S curve(FE) Level:
9. RFL(PI) Level:
0. MIRR Time:
↓↑ Change Value
[RETURN]Return to previous menu
```

5. Convert each value (YY and ZZ) from hexadecimal to decimal using conversion table.
6. Substract between these two values (YY and ZZ).
7. If the remainder is smaller than 93 (decimal), then it is OK. However if the value is higher than 93, then the BU (base unit) is defective and need to be change.
8. Release the Manual Adjust menu mode.

SECTION 5
ELECTRICAL ADJUSTMENTS

CONPOSITE VIDEO OUT LEVEL ADJUSTMENT (US and Canadian Models)

Setting:

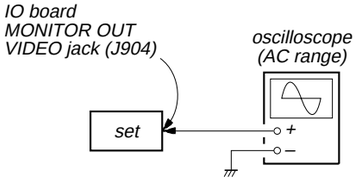

Procedure:

1. Insert the test disc (TDV-520CSO) (Part No.: J-2501-236-A), and color bar mode is played.
2. Connect an oscilloscope to the MONITOR OUT VIDEO jack (J904) on the IO board.
3. Input color bars signal from the color pattern generator.
4. Adjust the RV501 on the MIB01 board so that the Vp-p value of waveform becomes 1 Vp-p.

waveform:

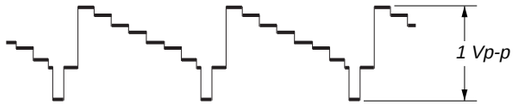

COMPONENT VIDEO OUT LEVEL ADJUSTMENT (US and Canadian Models)

Setting:

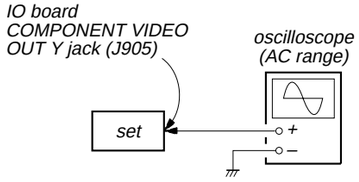

Procedure:

1. Insert the test disc (TDV-520CSO) (Part No.: J-2501-236-A), and color bar mode is played.
2. Connect an oscilloscope to the COMPONENT VIDEO OUT Y jack (J905) on the IO board.
3. Input color bars signal from the color pattern generator.
4. Adjust the RV502 on the MIB01 board so that the Vp-p value of waveform becomes 1 Vp-p.

waveform:

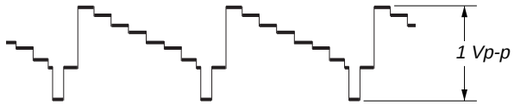

Adjustment Location:

– MIB01 Board (Component Side) –

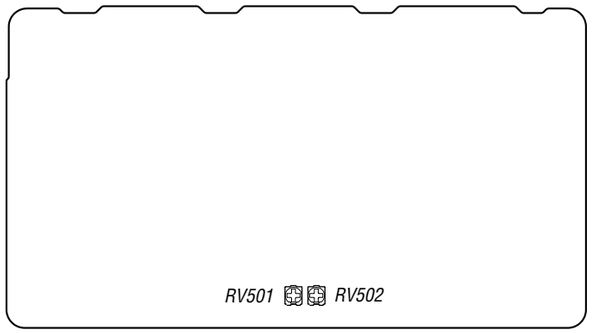

SECTION 6
DIAGRAMS

6-1. BLOCK DIAGRAM – RF SERVO/VIDEO Section –

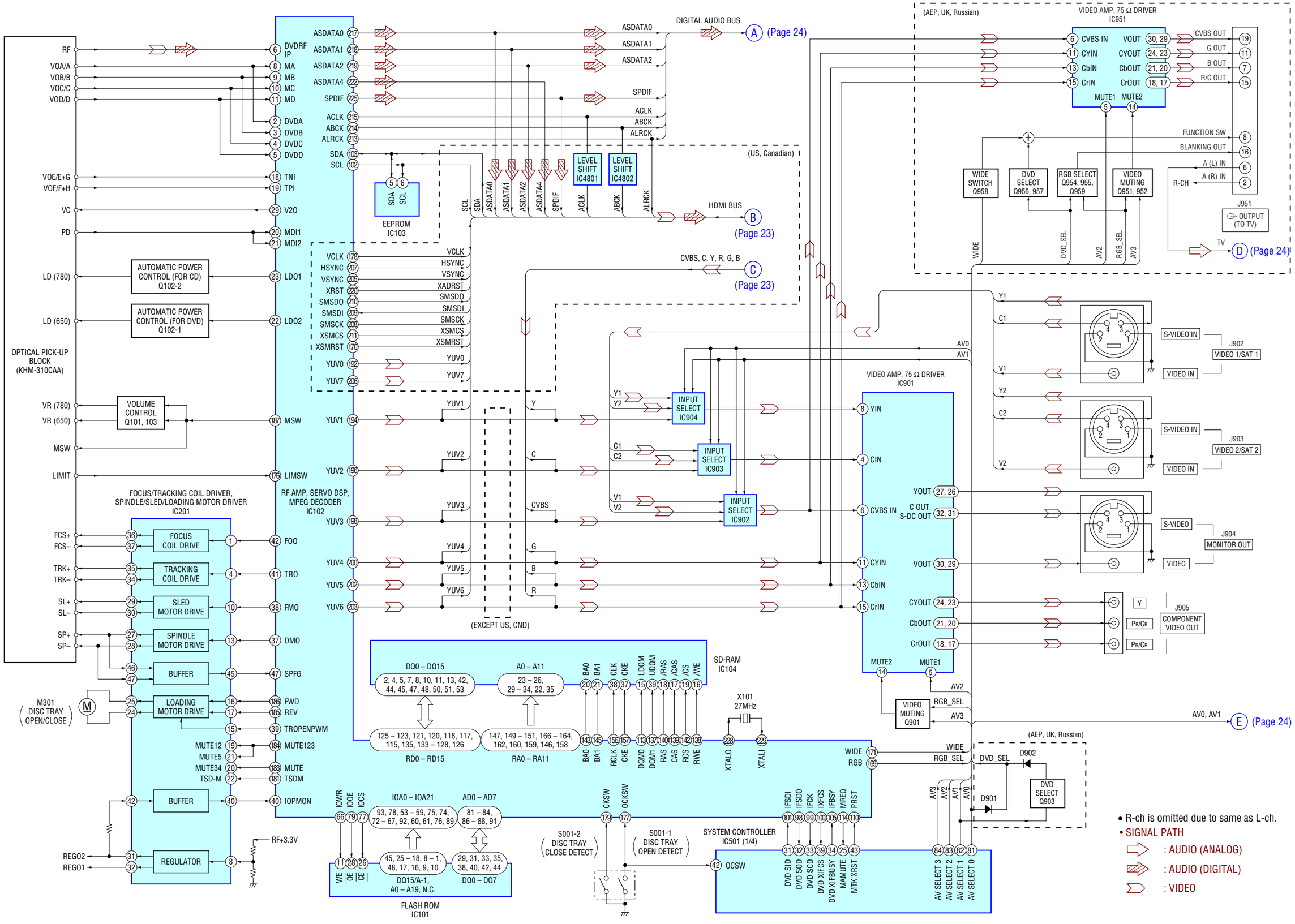

- R-ch is omitted due to same as L-ch.
- SIGNAL PATH
  - : AUDIO (ANALOG)
  - : AUDIO (DIGITAL)
  - : VIDEO

6-2. BLOCK DIAGRAM – HDMI Section (US and Canadian models) –

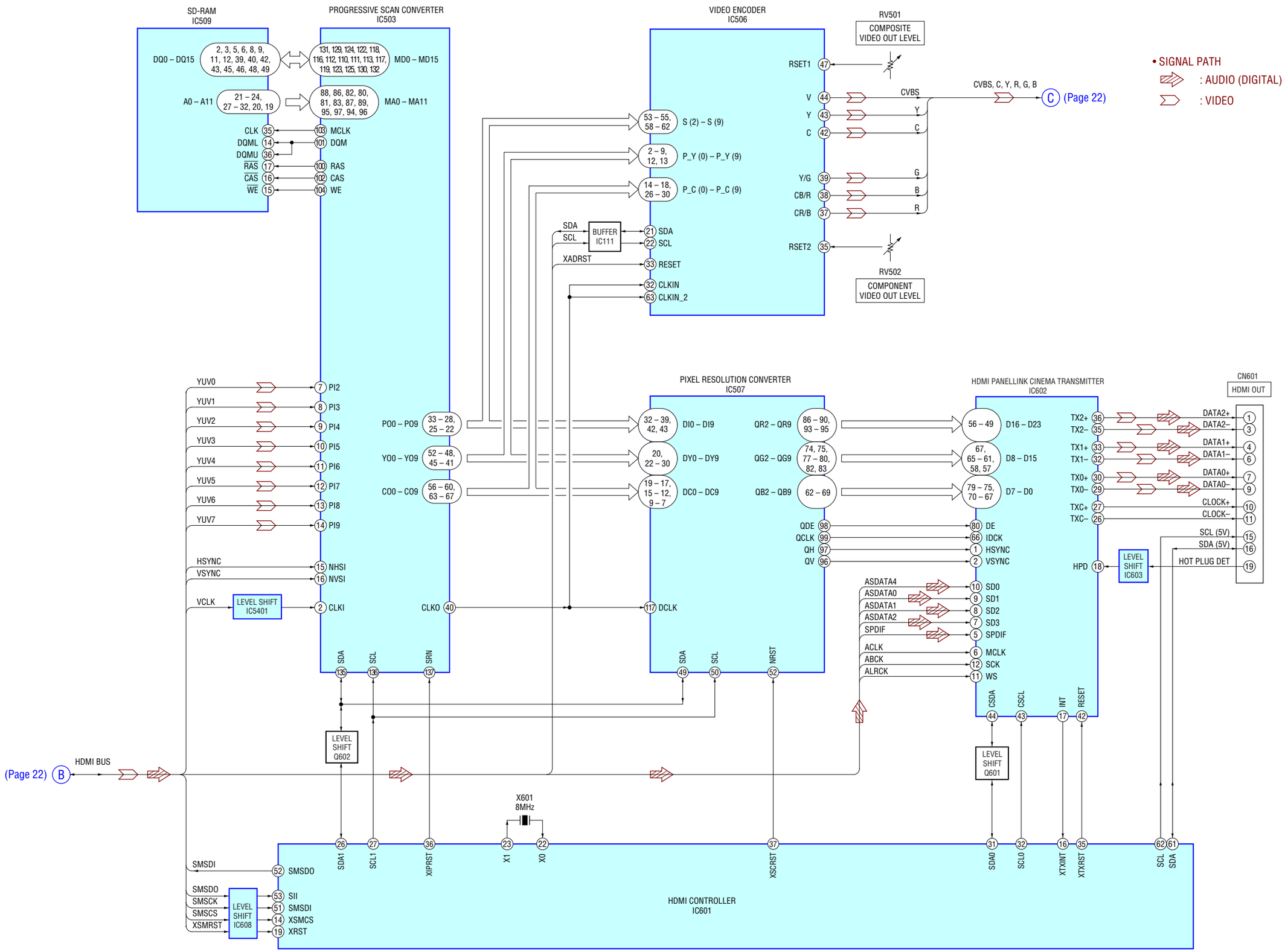

6-3. BLOCK DIAGRAM – MAIN Section –

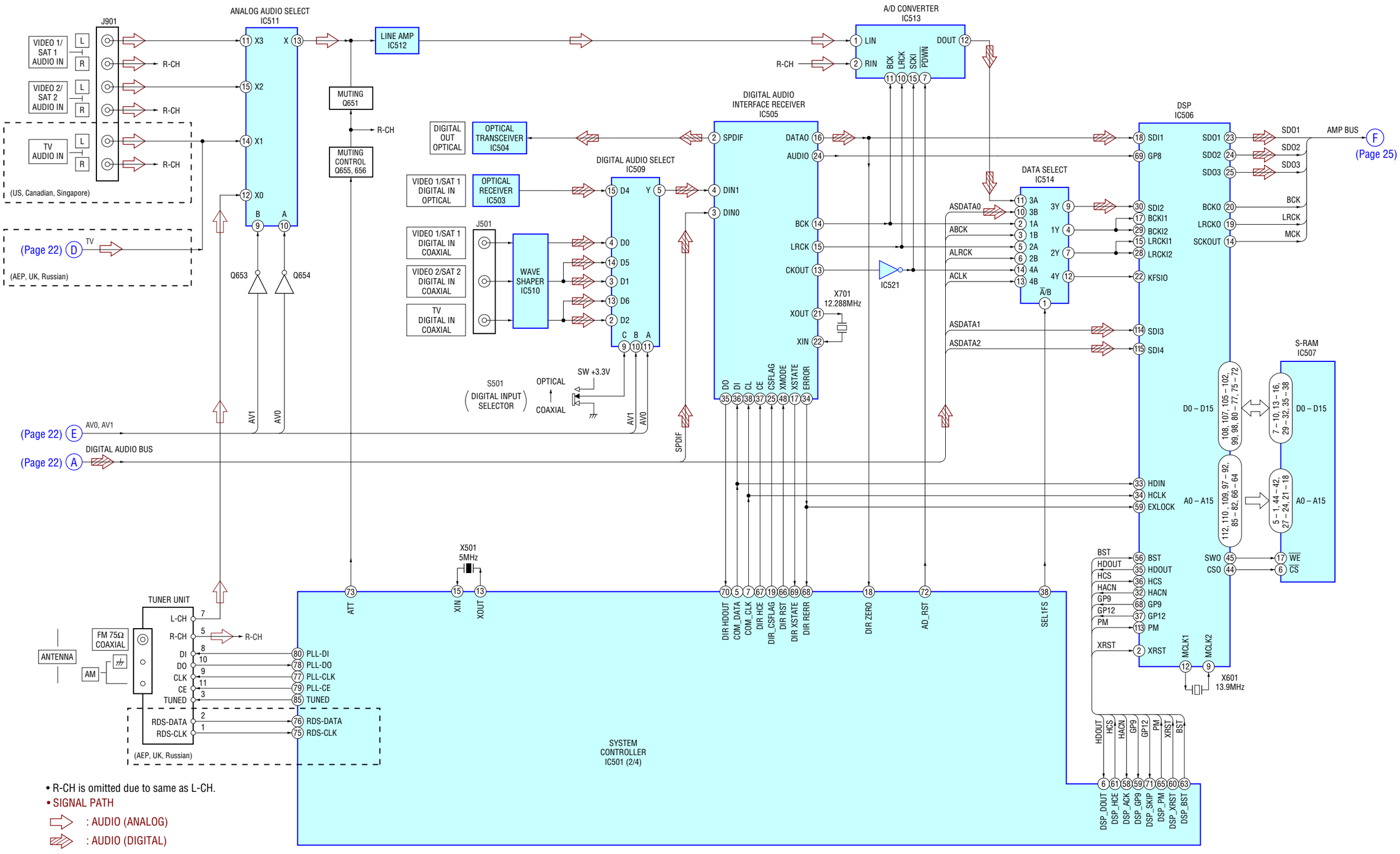

- R-CH is omitted due to same as L-CH.
- SIGNAL PATH

⇨ : AUDIO (ANALOG)

⇨ : AUDIO (DIGITAL)

6-4. BLOCK DIAGRAM – AMP Section –

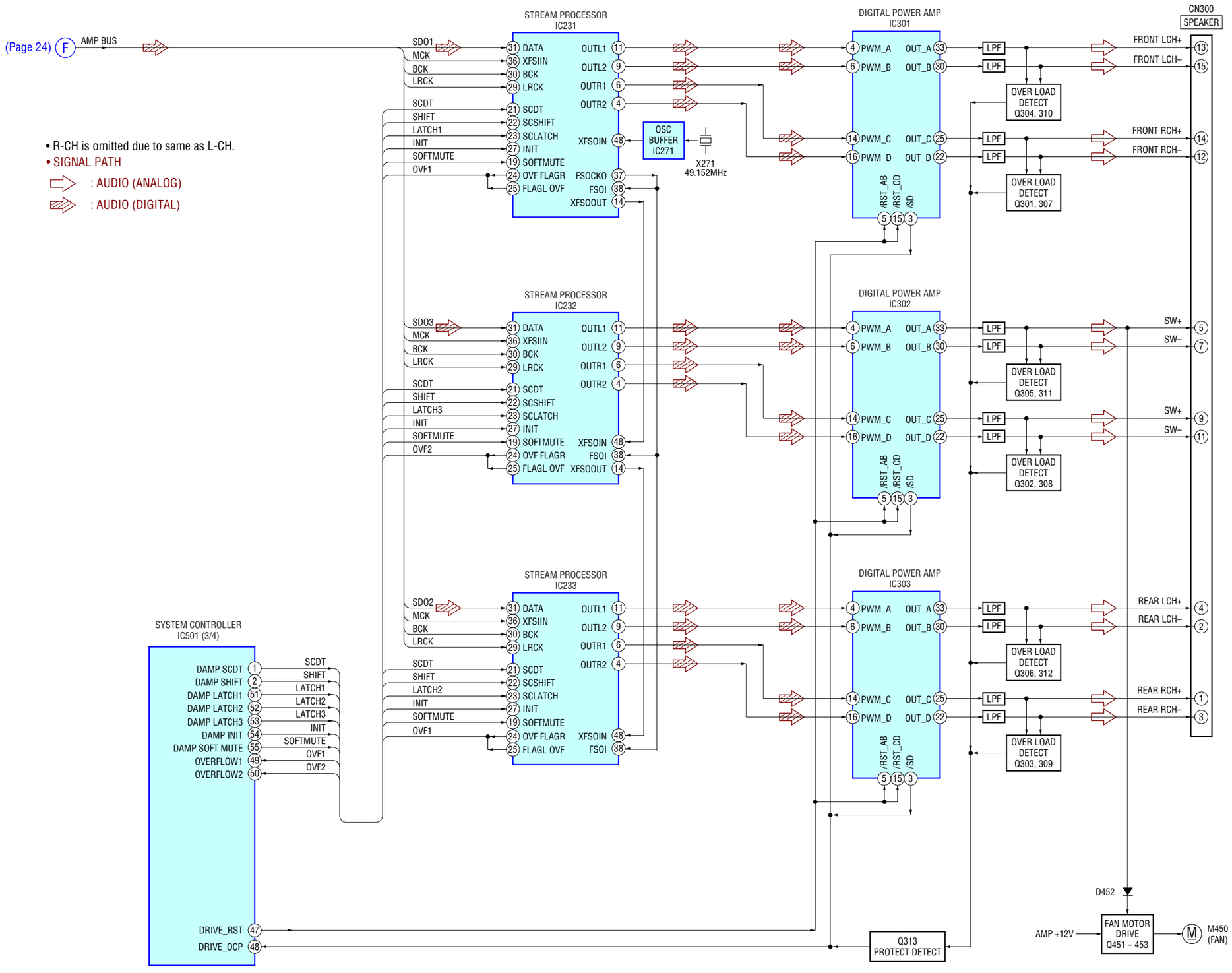

6-5. BLOCK DIAGRAM – PANEL/POWER SUPPLY Section –

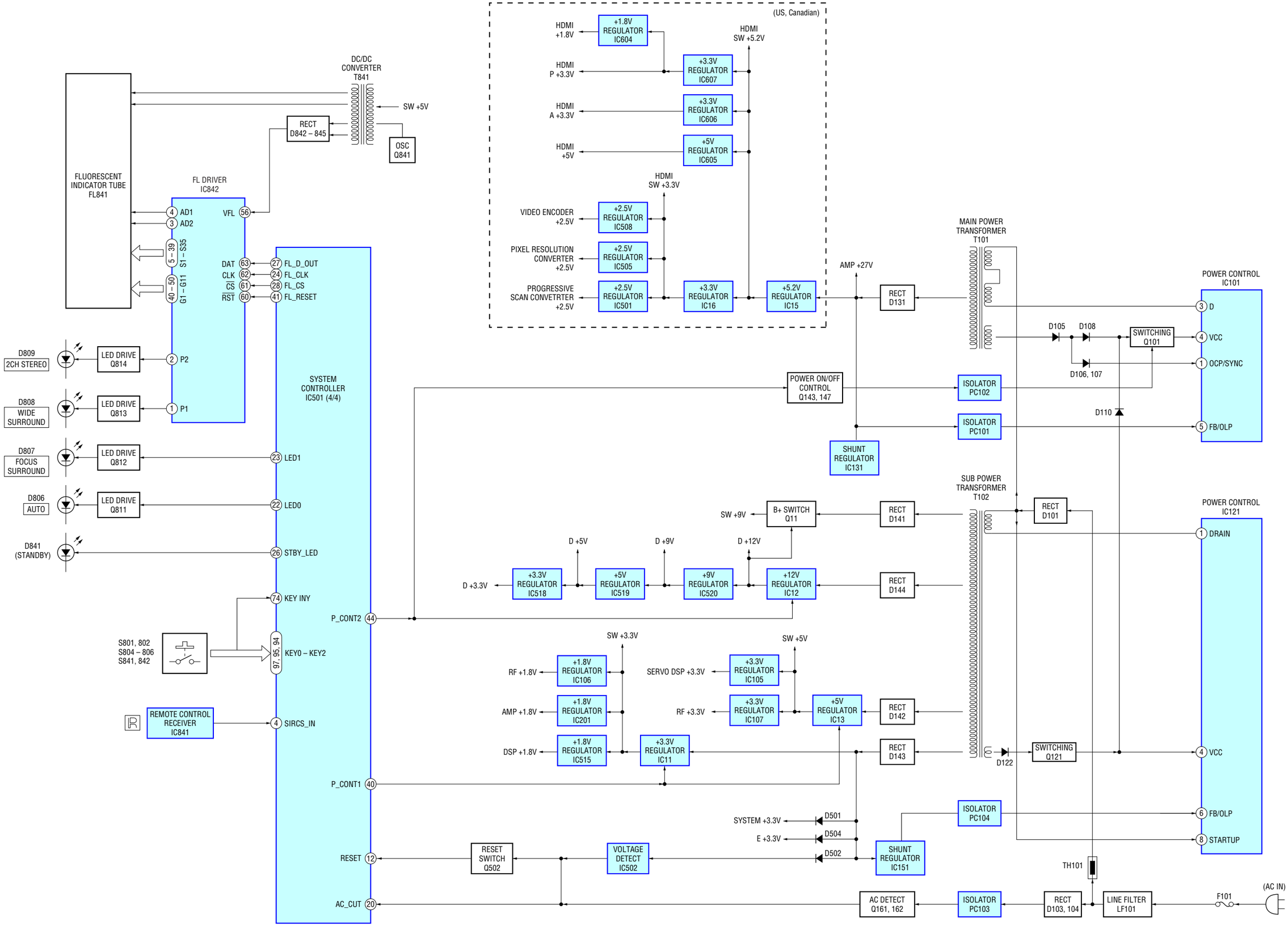

• Note for Printed Wiring Boards and Schematic Diagrams

Note on Printed Wiring Board:

- ○——— : parts extracted from the component side.
- ——— : parts extracted from the conductor side.
- △ : internal component.
- ▬ : Pattern from the side which enables seeing.

(The other layers' patterns are not indicated.)

Caution:	
Pattern face side: (Conductor Side)	Parts on the pattern face side seen from the pattern face are indicated.
Parts face side: (Component Side)	Parts on the parts face side seen from the parts face are indicated.

- DMB10 and MIB01 boards are multi-layer printed board. However, the patterns of intermediate layers have not been included in diagrams.
- Indication of transistor

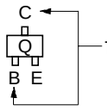

These are omitted.

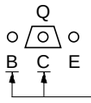

These are omitted.

Note on Schematic Diagram:

- All capacitors are in µF unless otherwise noted. (p: pF) 50 WV or less are not indicated except for electrolytics and tantalums.
- All resistors are in Ω and 1/4 W or less unless otherwise specified.
- △ : internal component.
- : nonflammable resistor.
- : fusible resistor.
- : panel designation.

Note:	**Note:**
The components identified by mark ⚠ or dotted line with mark ⚠ are critical for safety. Replace only with part number specified.	Les composants identifiés par une marque ⚠ sont critiques pour la sécurité. Ne les remplacer que par une pièce portant le numéro spécifié.

- ▬▬ : B+ Line.
- ▬ ▬ ▬ : B– Line.
- ▭ : adjustment for repair.
- Voltages and waveforms are dc with respect to ground under no-signal conditions.
  – DMB10, MIB01 and IO Boards –
  no mark : DVD PLAY
  ＊ : Impossible to measure
  – Other Boards –
  no mark : TUNER
  ( ) : DVD PLAY
  ＊ : Impossible to measure
- Voltages are taken with a VOM (Input impedance 10 MΩ). Voltage variations may be noted due to normal production tolerances.
- Waveforms are taken with a oscilloscope. Voltage variations may be noted due to normal production tolerances.
- Circled numbers refer to waveforms.
- Signal path.
  ⇨ : AUDIO (ANALOG)
  ⇨ : AUDIO (DIGITAL)
  ⇨ : VIDEO
- Abbreviation
  CND : Canadian model
  RU : Russian model
  SP : Singapore model

• Circuit Boards Location

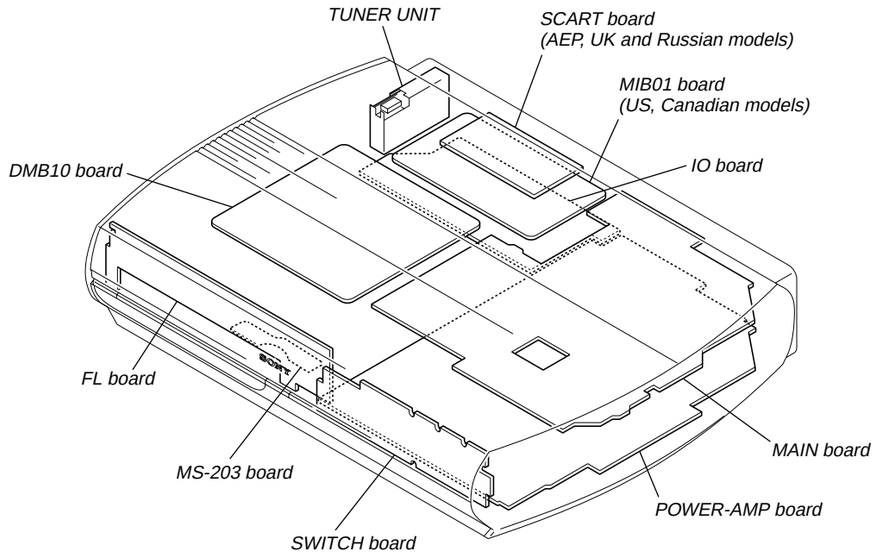

6-6. PRINTED WIRING BOARDS – DMB10 Section (1/2) –

• See page 27 for Circuit Boards Location.

: Uses unleaded solder.

• **Semiconductor Location**

Ref. No.	Location
D1001	B-3
IC101	D-5
IC102	D-4
IC103	C-3
IC104	C-4
IC106	B-4
IC201	B-5
IC4801	D-2
Q103	E-3

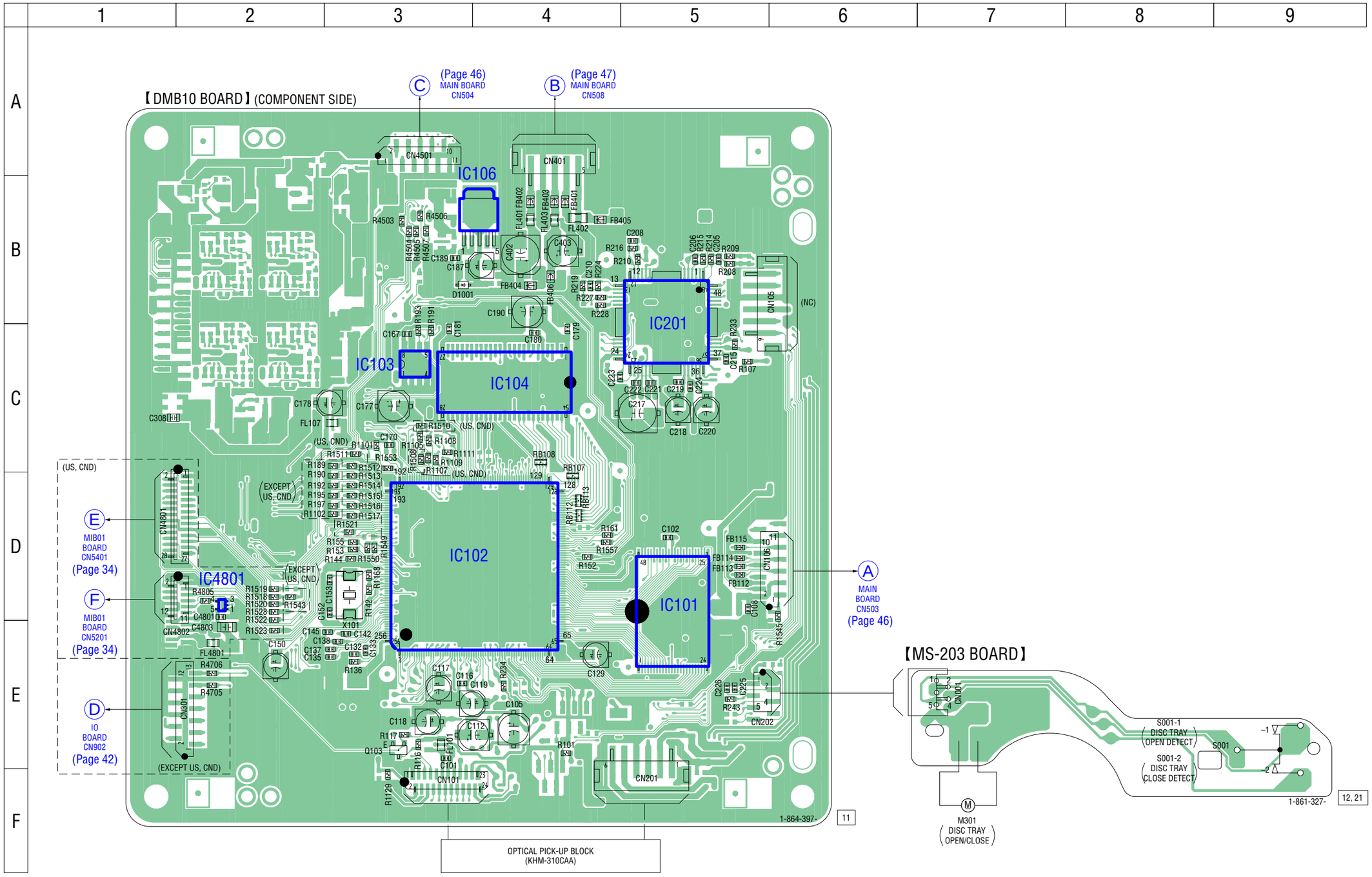

New part of EEPROM (IC103) on the DMB10 board cannot be used. Therefore, if the mounted DMB10 board is replaced, exchange new EEPROM with that used before the replacement.

6-7. PRINTED WIRING BOARD – DMB10 Section (2/2) –

• See page 27 for Circuit Boards Location.

: Uses unleaded solder.

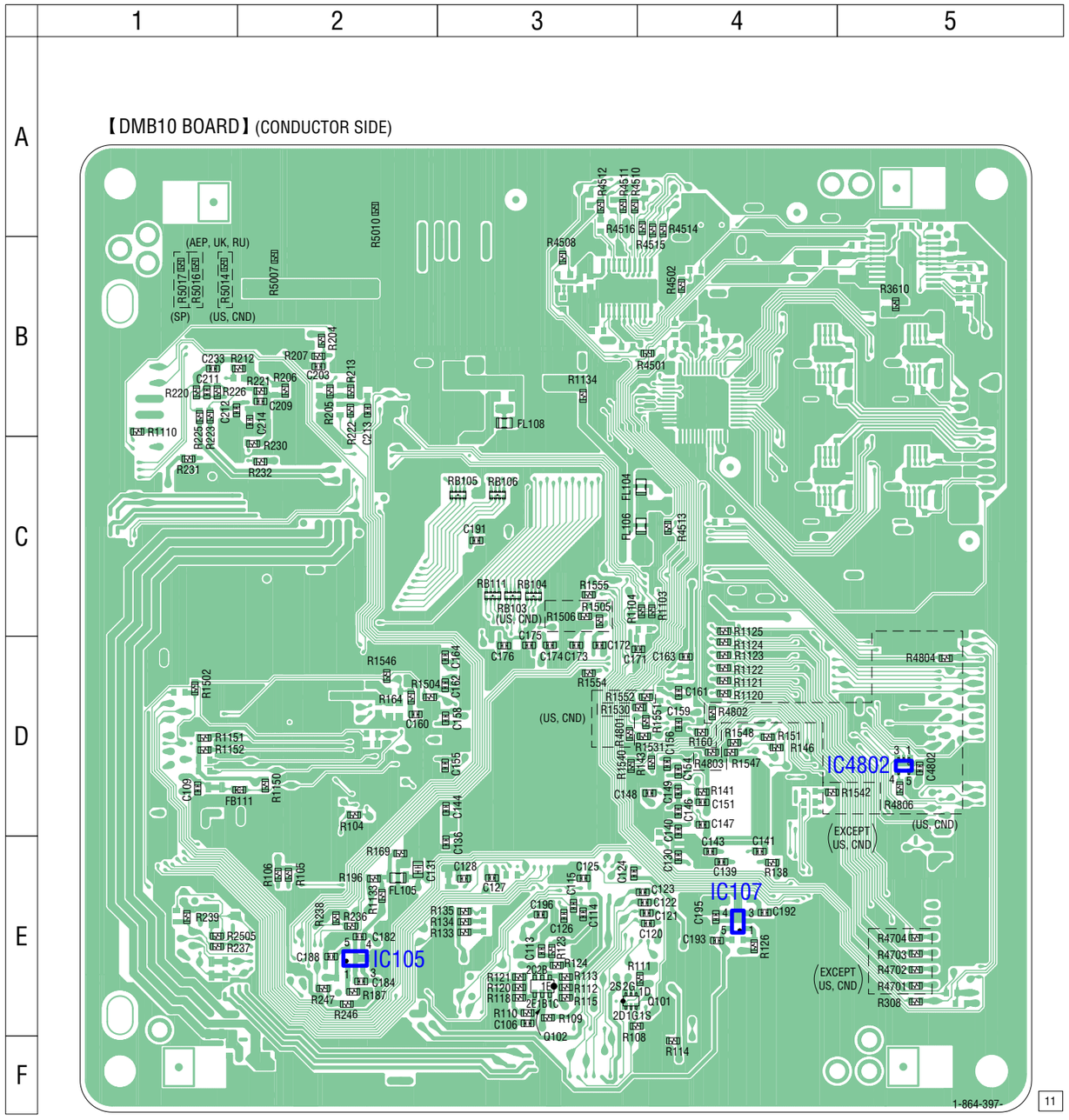

• **Semiconductor Location**

Ref. No.	Location
IC105	E-2
IC107	E-4
IC4802	D-5
Q101	E-3
Q102	E-3

6-8. SCHEMATIC DIAGRAM – DMB10 Section (1/4) –

• See page 64 for IC Block Diagrams.

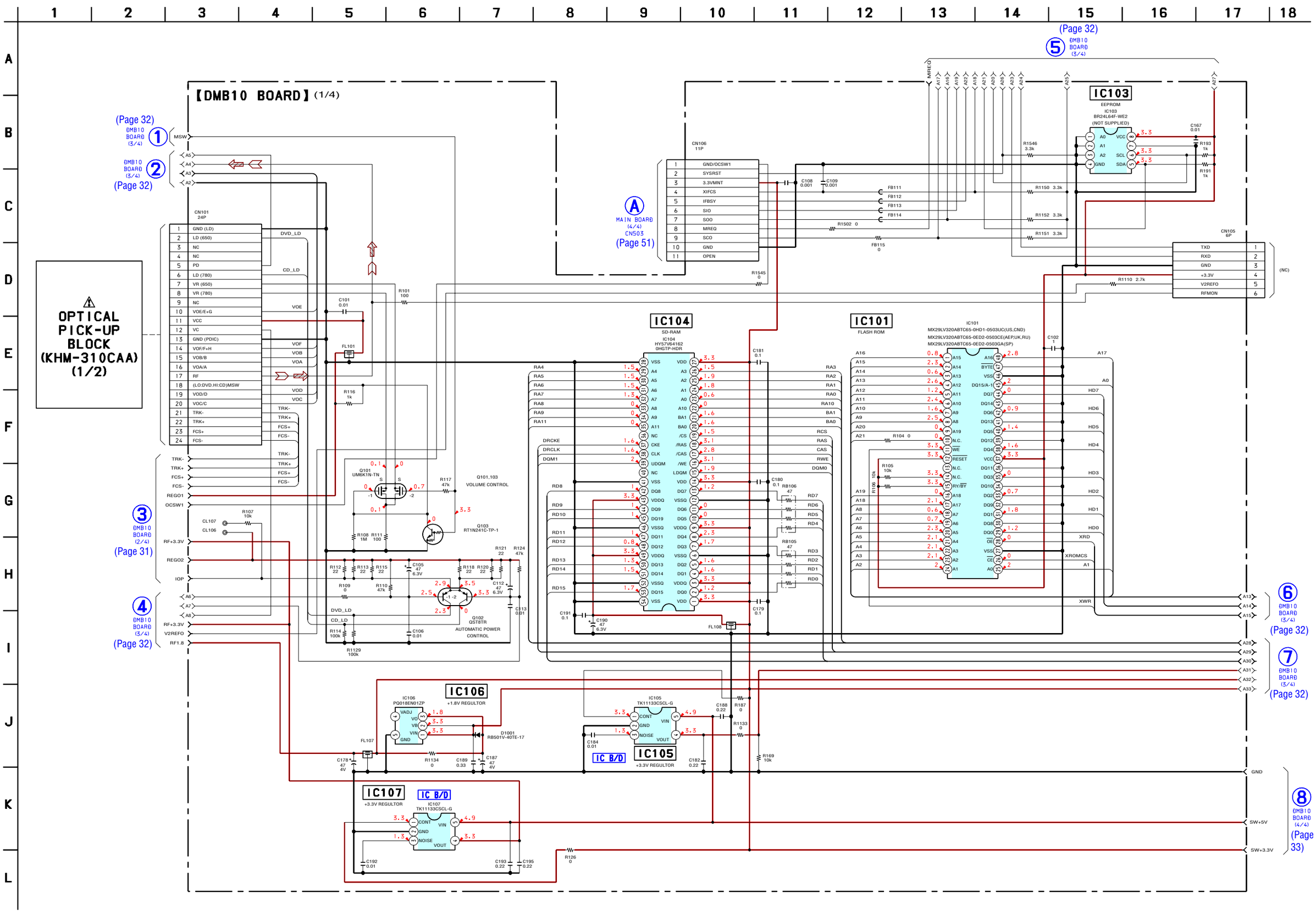

New part of EEPROM (IC103) on the DMB10 board cannot be used. Therefore, if the mounted DMB10 board is replaced, exchange new EEPROM with that used before the replacement.

6-9. SCHEMATIC DIAGRAM – DMB10 Section (2/4) –

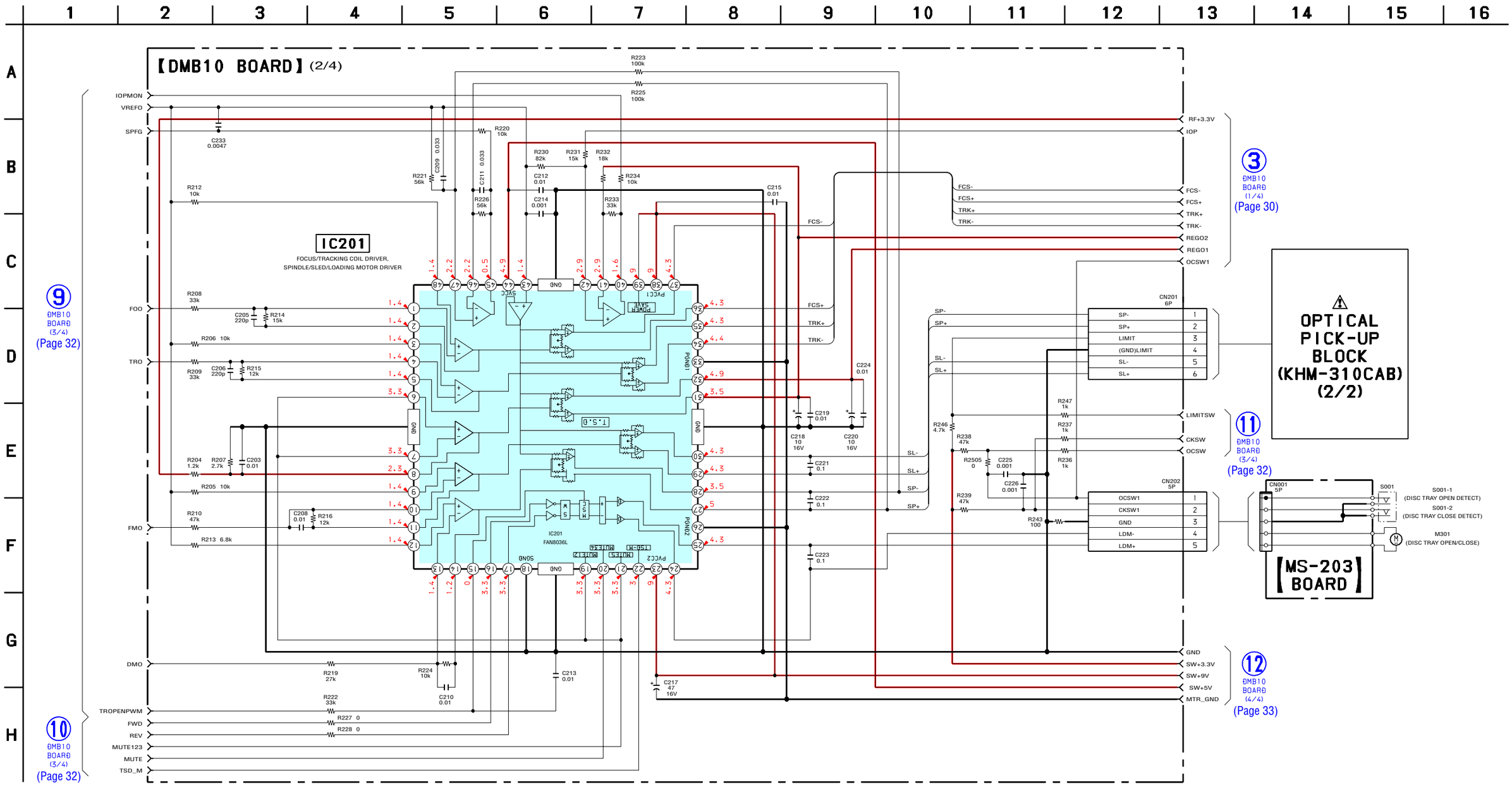

6-10. SCHEMATIC DIAGRAM – DMB10 Section (3/4) –

• See page 61 for Waveforms. • See page 73 for IC Pin Function Description.

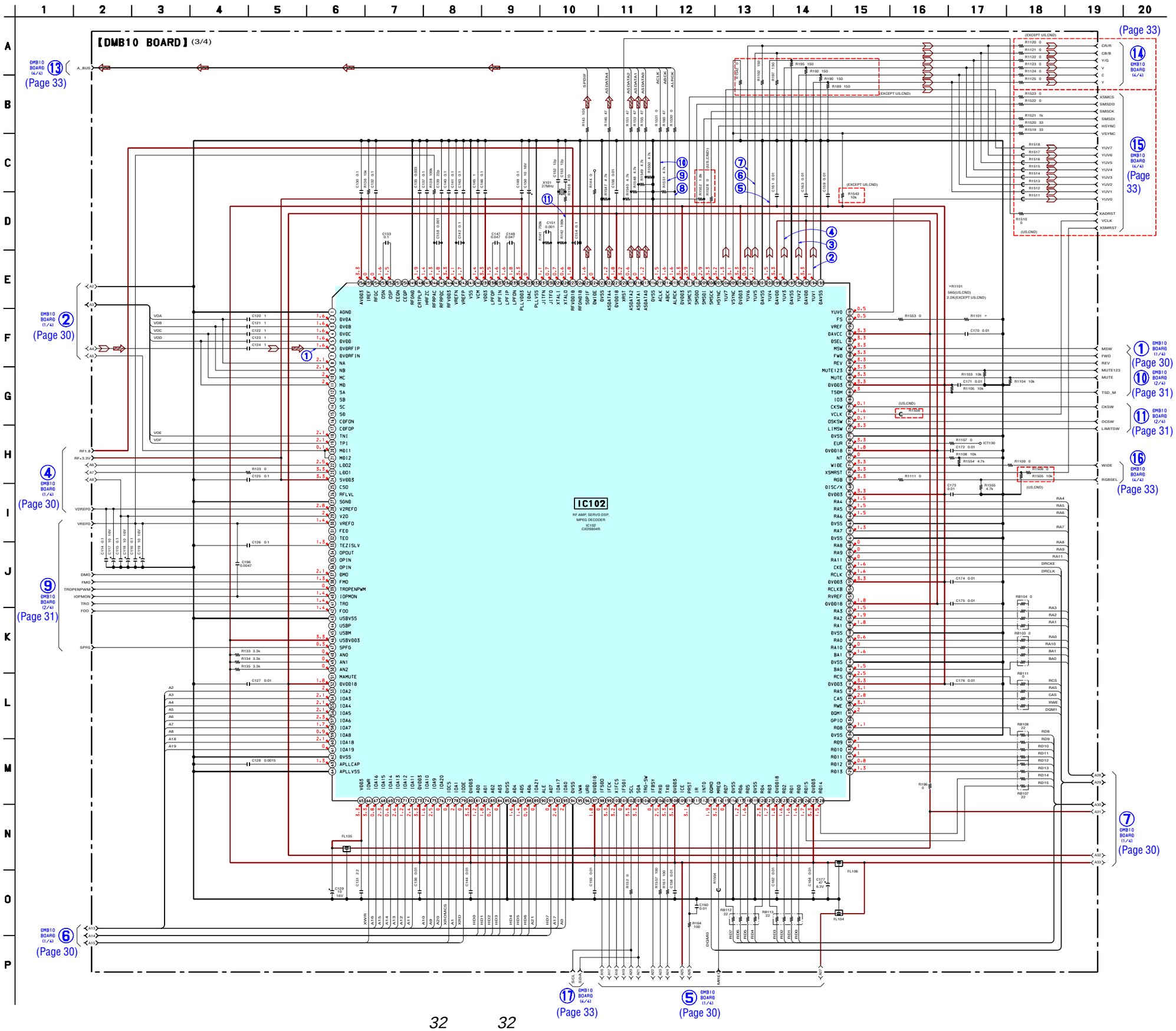

6-11. SCHEMATIC DIAGRAM – DMB10 Section (4/4) –

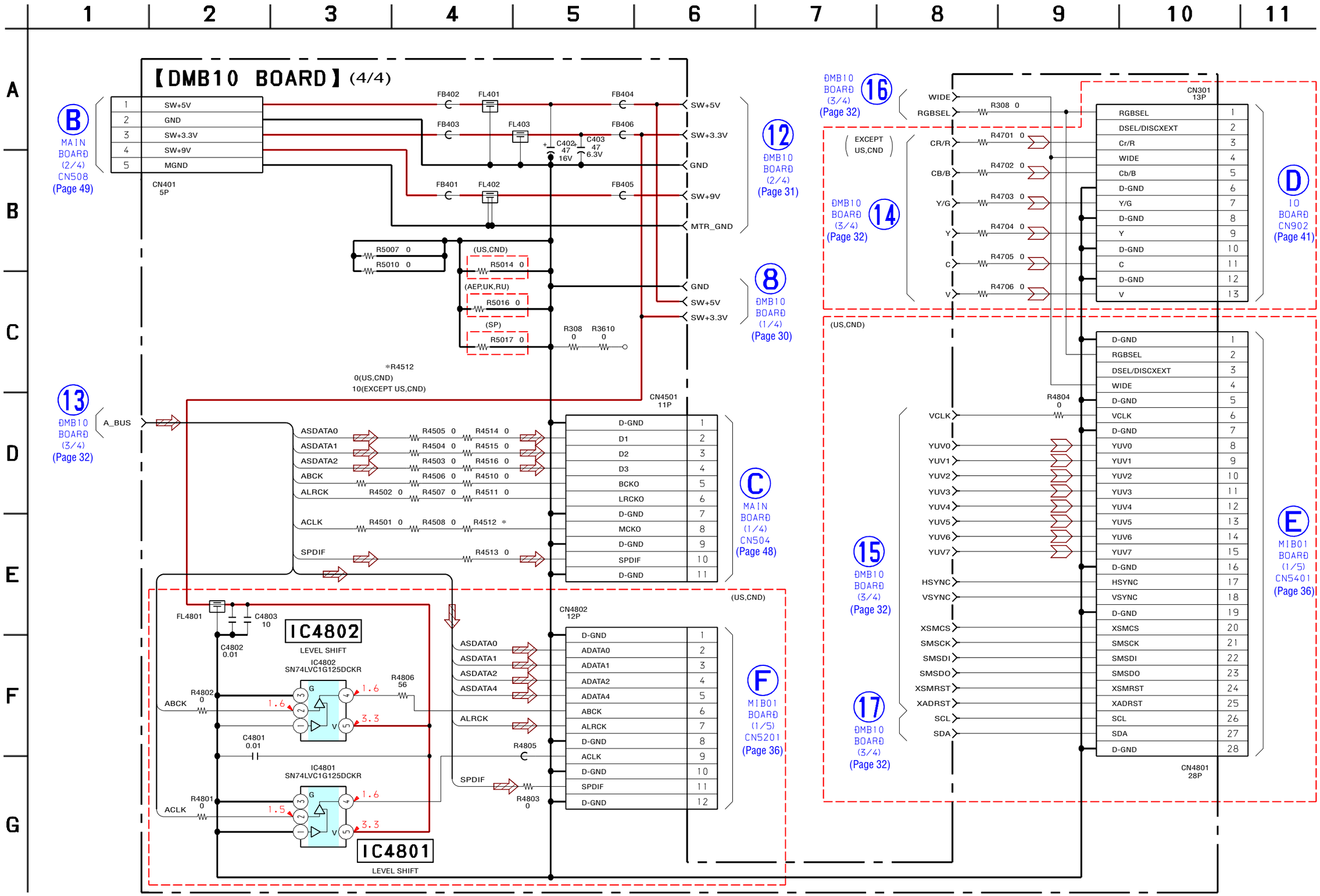

6-12. PRINTED WIRING BOARD – MIB01 Board (Component Side) (US and Canadian models) –

• See page 27 for Circuit Boards Location.

: Uses unleaded solder.

• **Semiconductor Location**

Ref. No.	Location
IC501	D-2
IC503	C-3
IC506	E-5
IC507	C-6
IC508	E-4
IC601	E-8
IC602	C-9
IC603	B-10
IC5401	E-3

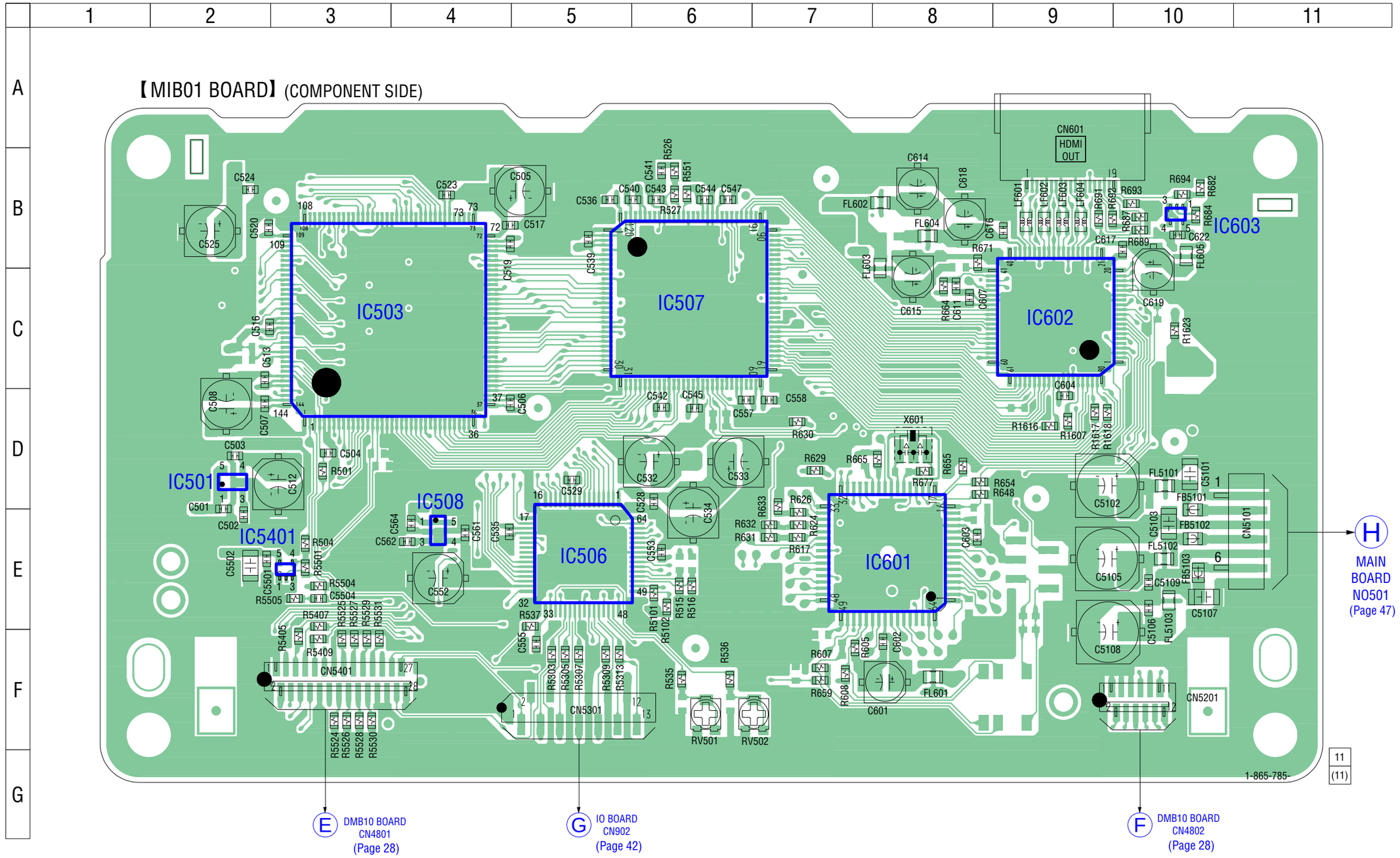

6-13. PRINTED WIRING BOARD – MIB01 Board (Conductor Side) (US and Canadian models) –

• See page 27 for Circuit Boards Location.

: Uses unleaded solder.

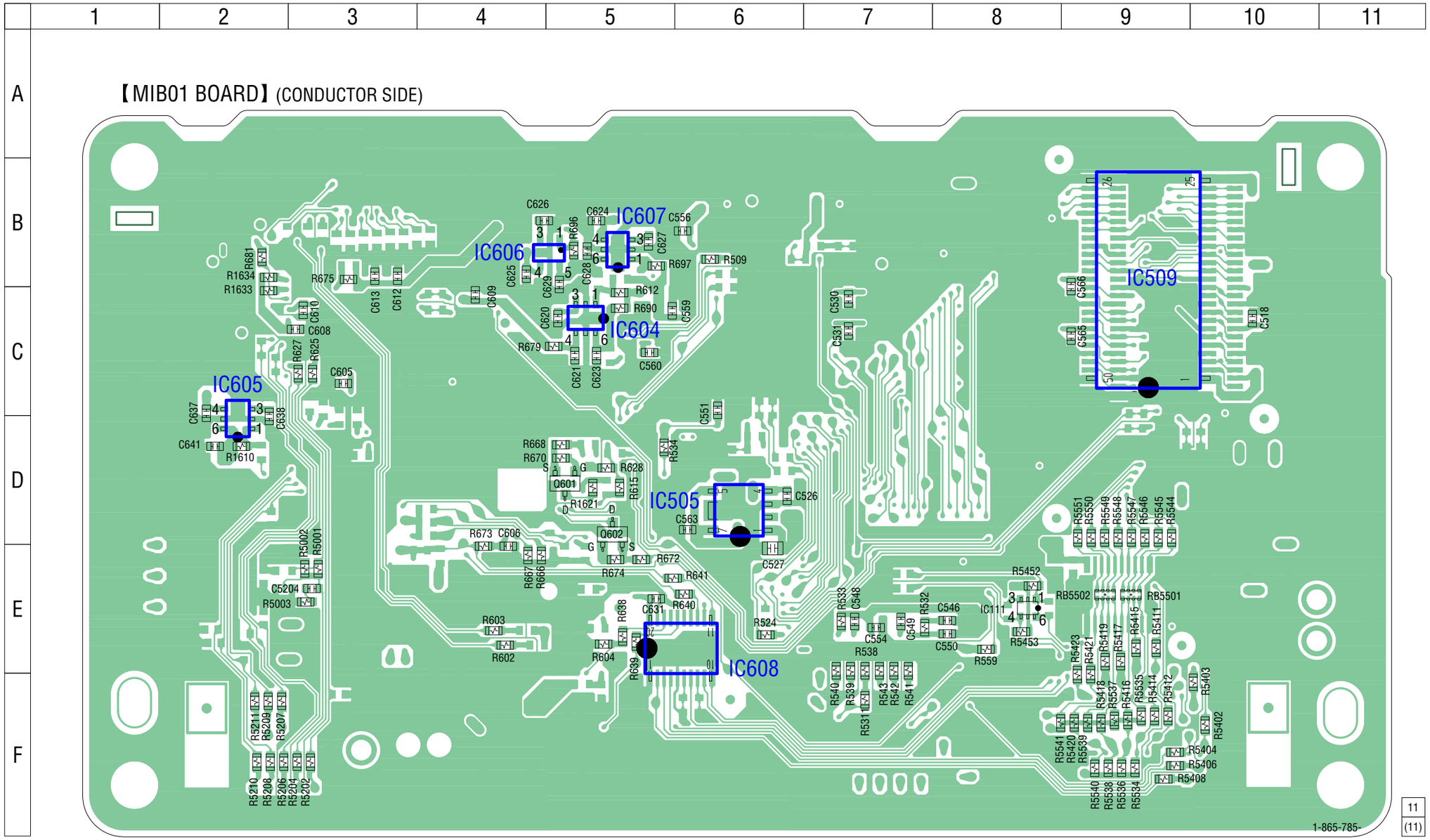

• Semiconductor Location

Ref. No.	Location
IC111	E-8
IC505	D-6
IC509	B-9
IC604	C-5
IC605	D-2
IC606	B-5
IC607	B-5
IC608	E-6
Q601	D-5
Q602	D-5

6-14. SCHEMATIC DIAGRAM – MIB01 Board (1/5) (US and Canadian models) –

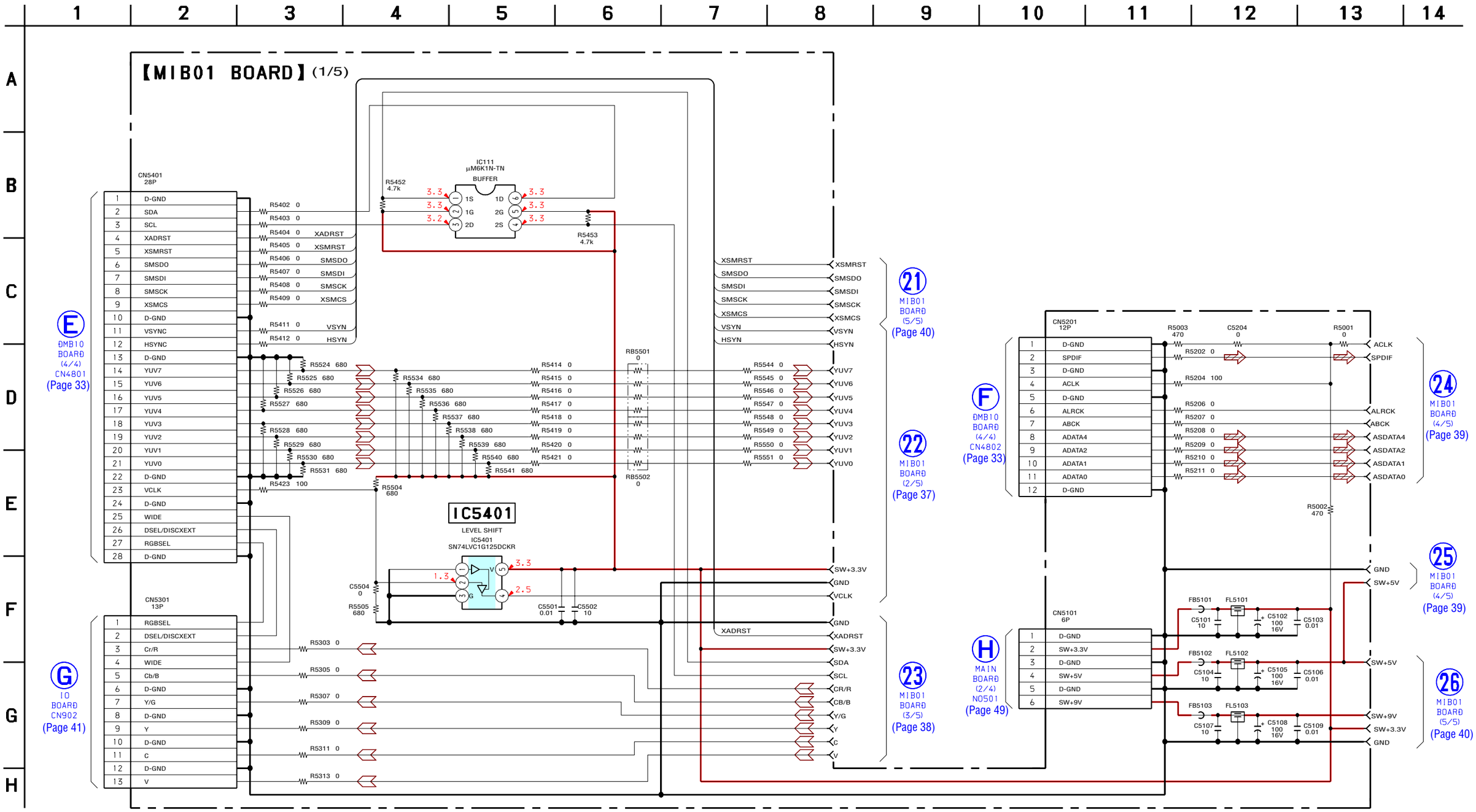

6-15. SCHEMATIC DIAGRAM – MIB01 Board (2/5) (US and Canadian models) –

• See page 61 for Waveforms. • See page 64 for IC Block Diagrams. • See page 73 for IC Pin Function Description.

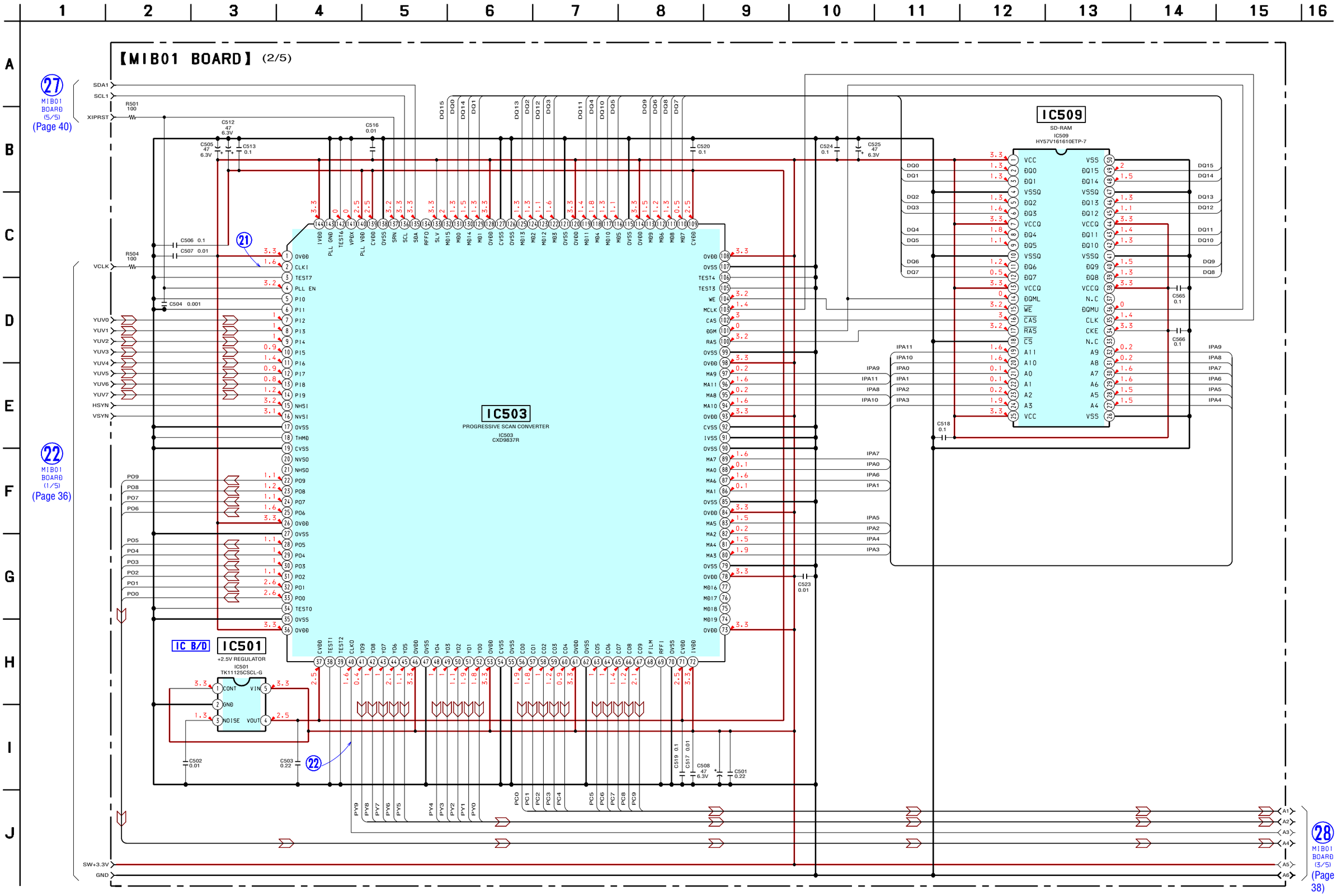

6-16. SCHEMATIC DIAGRAM – MIB01 Board (3/5) (US and Canadian models) –

• See page 61 for Waveforms. • See page 64 for IC Block Diagrams. • See page 73 for IC Pin Function Description.

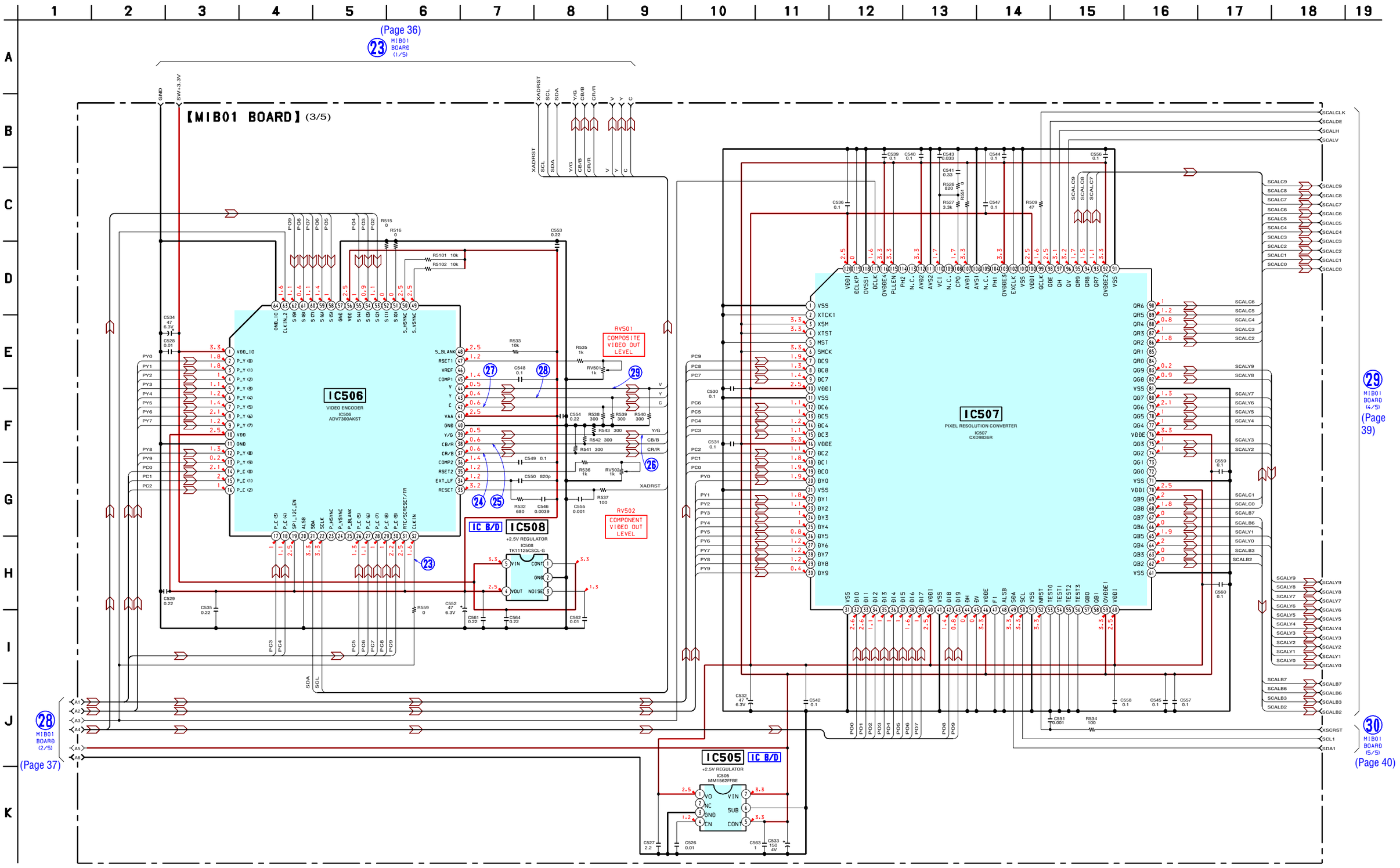

6-17. SCHEMATIC DIAGRAM – MIB01 Board (4/5) (US and Canadian models) –

• See page 64 for IC Block Diagrams.

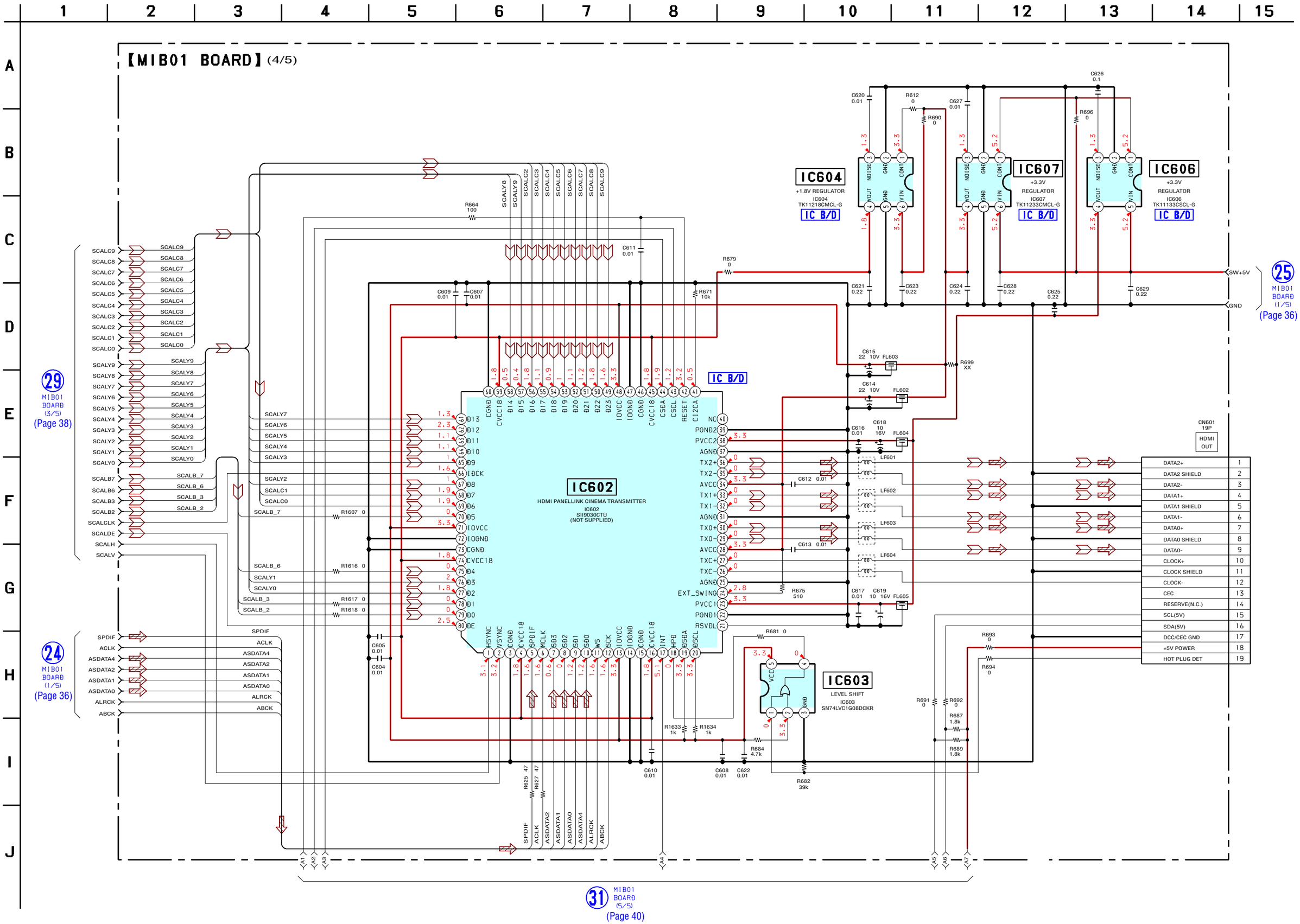

6-18. SCHEMATIC DIAGRAM – MIB01 Board (5/5) (US and Canadian models) –

• See page 61 for Waveforms. • See page 64 for IC Block Diagrams. • See page 73 for IC Pin Function Description.

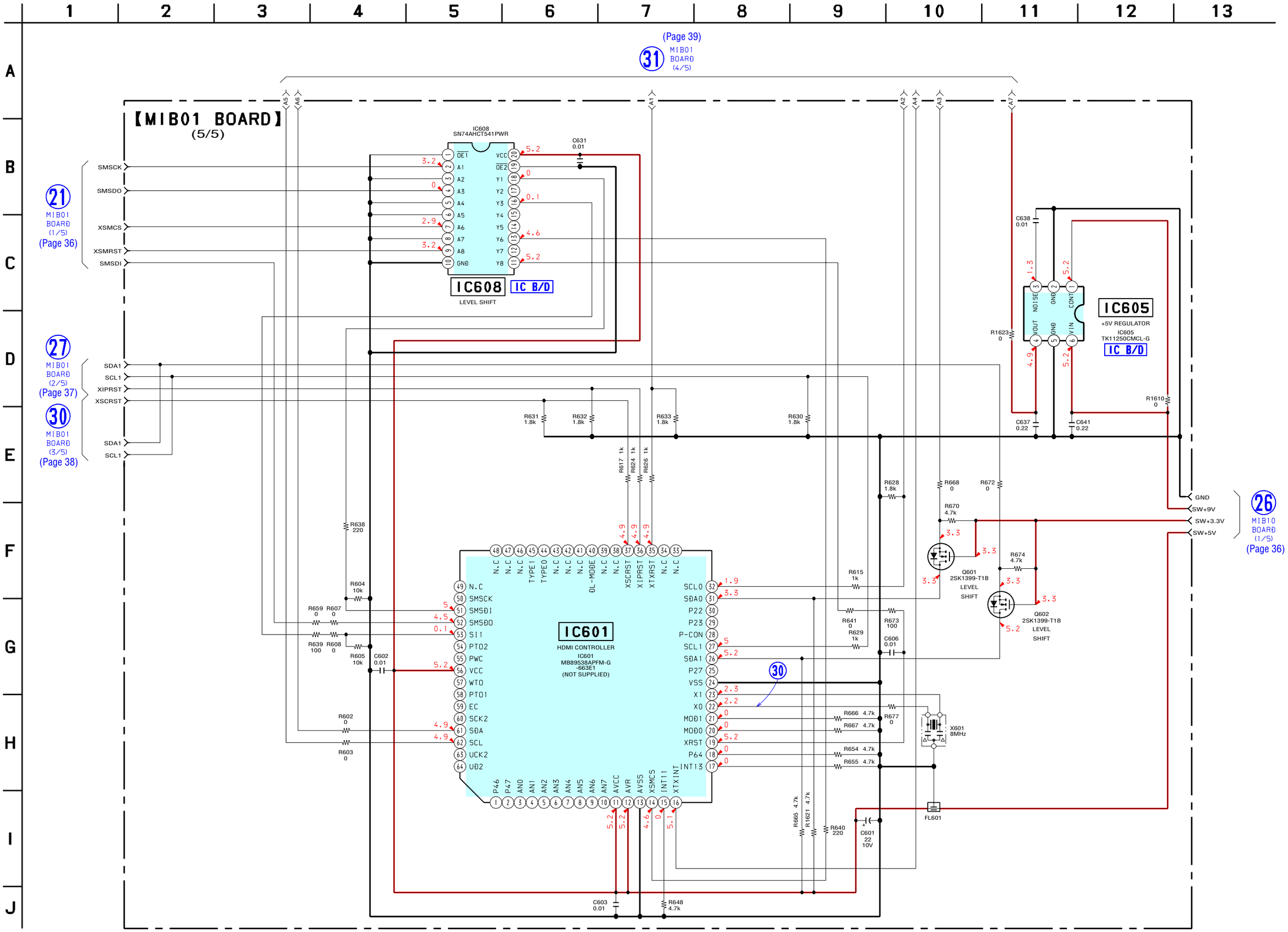

6-19. SCHEMATIC DIAGRAM – IO Board –

• See page 61 for Waveforms. • See page 64 for IC Block Diagrams.

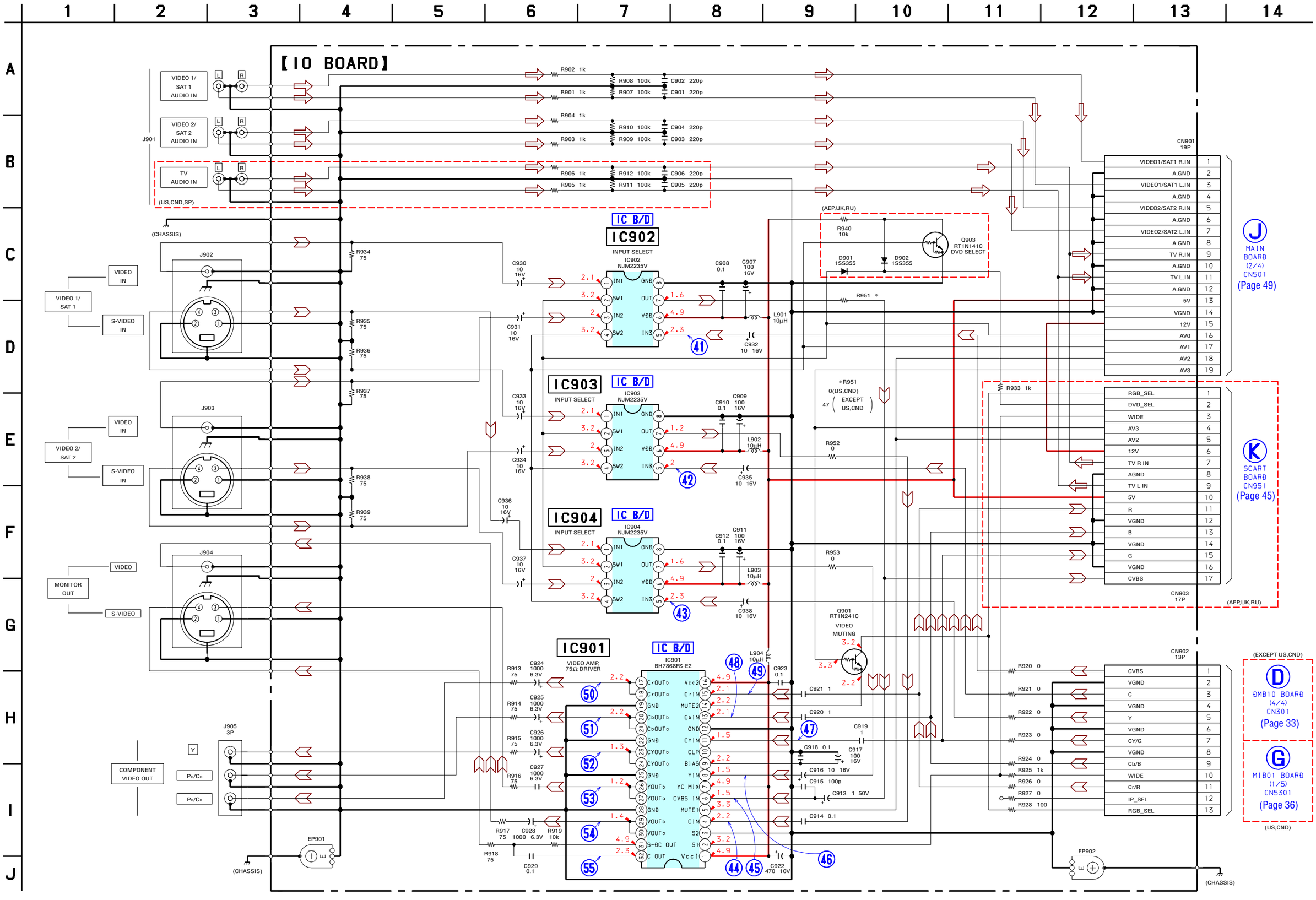

6-20. PRINTED WIRING BOARD – IO Board (Component Side) –

• See page 27 for Circuit Boards Location. : Uses unleaded solder.

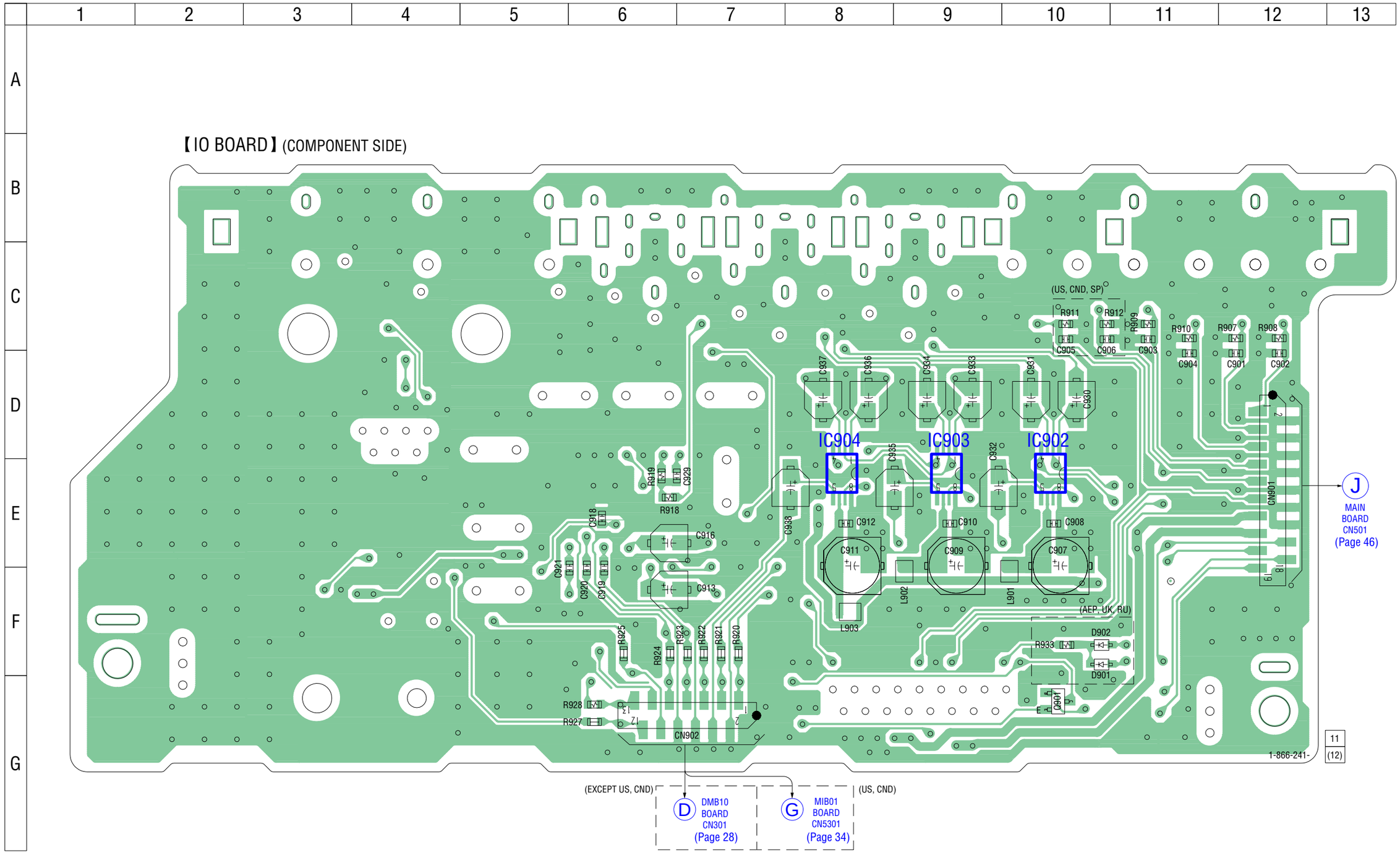

- **Semiconductor Location**

Ref. No.	Location
D901	F-10
D902	F-10
IC902	E-10
IC903	E-9
IC904	E-8
Q901	G-10

6-21. PRINTED WIRING BOARD – IO Board (Conductor Side) –

• See page 27 for Circuit Boards Location. : Uses unleaded solder.

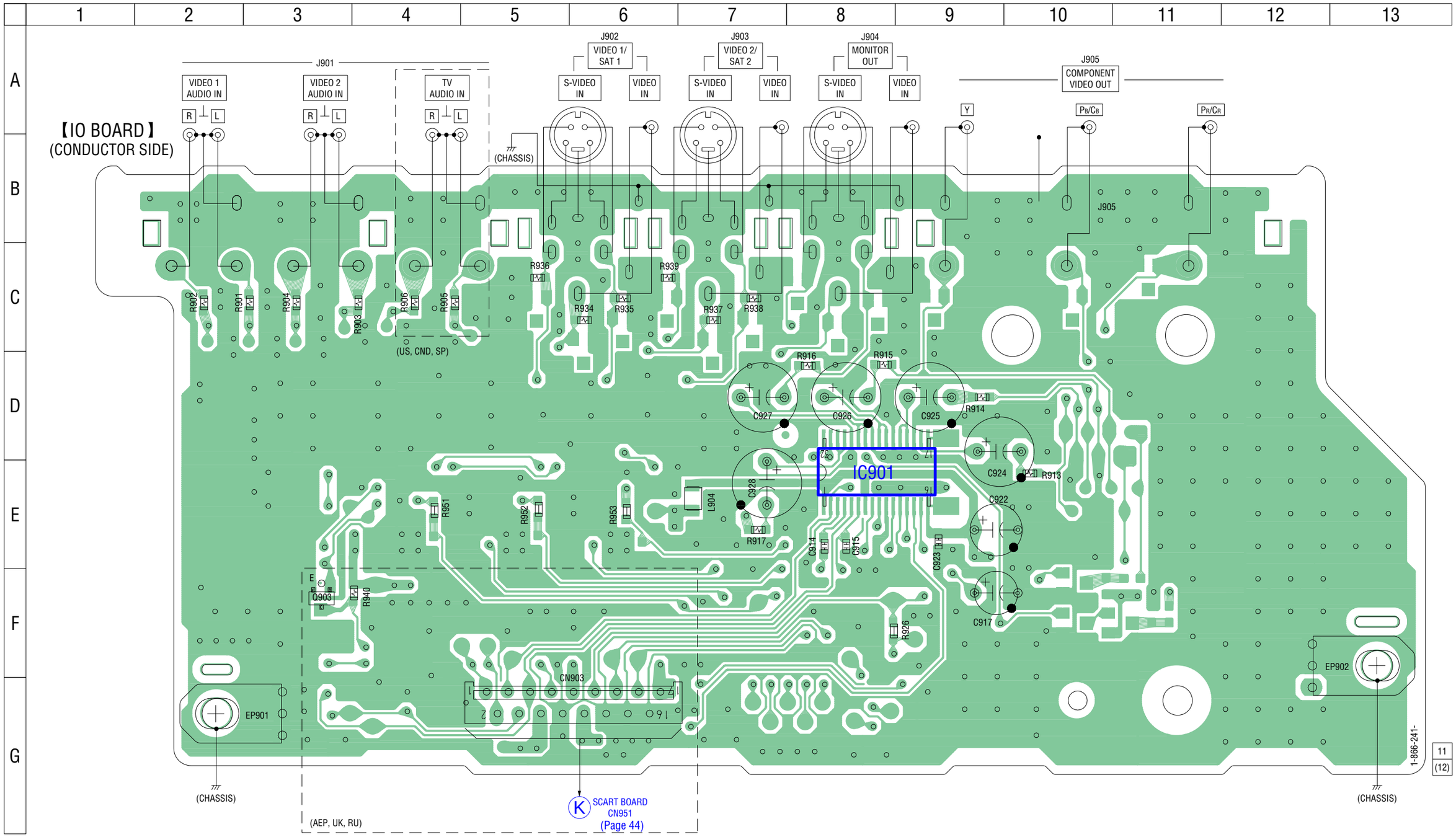

- **Semiconductor Location**

Ref. No.	Location
IC901	E-8
Q903	F-3

6-22. PRINTED WIRING BOARD – SCART Board (AEP, UK and Russian models) –

• See page 27 for Circuit Boards Location. : Uses unleaded solder.

【SCART BOARD】(COMPONENT SIDE)

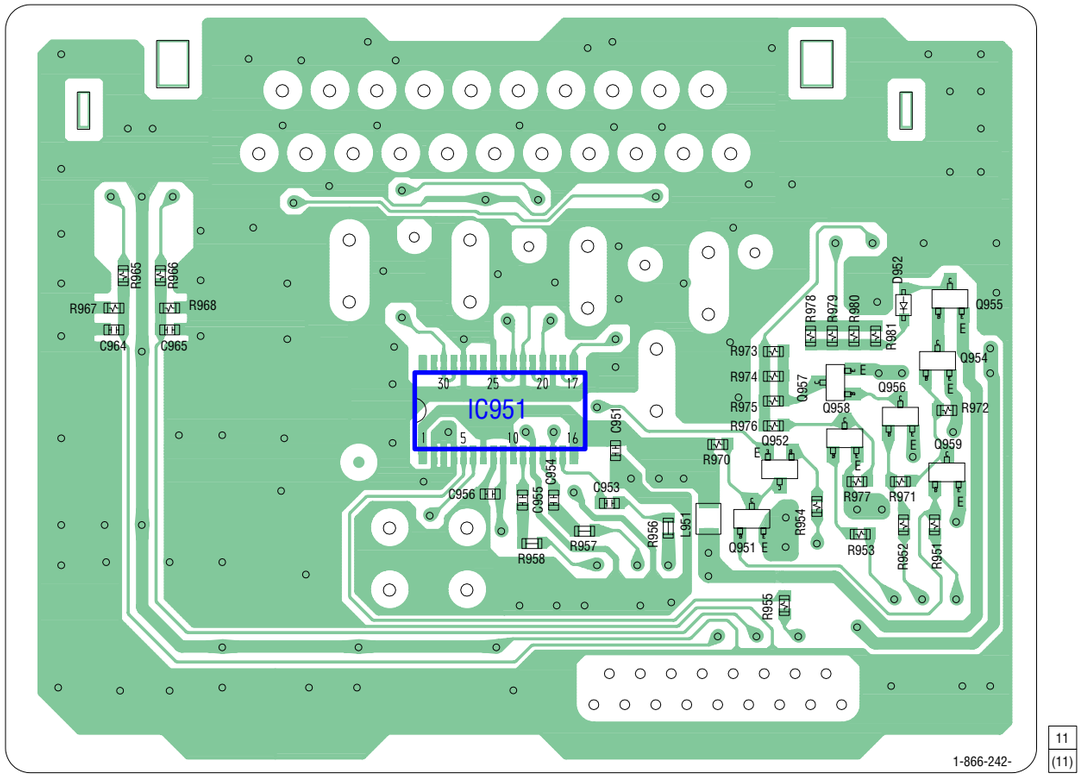

【SCART BOARD】
(CONDUCTOR SIDE)

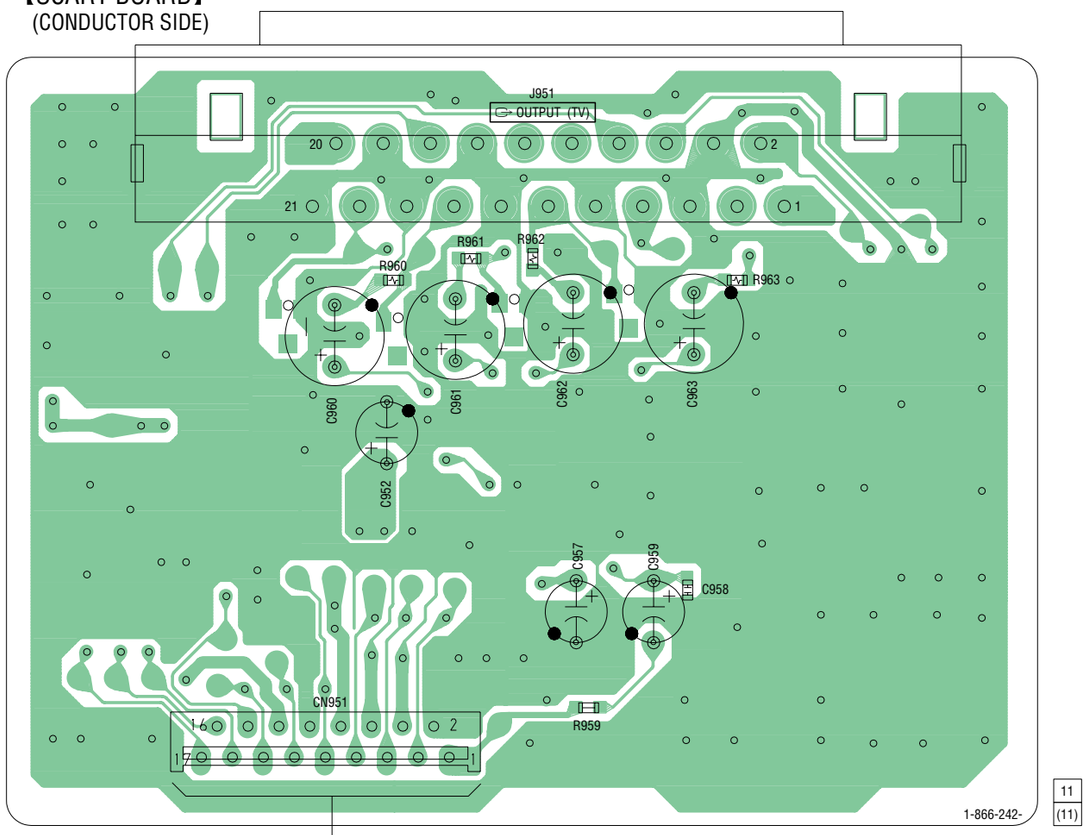

K IO BOARD
CN903
(Page 43)

- **Semiconductor Location**

Ref. No.	Location
D952	C-7
IC951	D-4
Q951	E-6
Q952	D-6
Q954	D-7
Q955	C-7
Q956	D-7
Q957	D-6
Q958	D-6
Q959	D-7

6-23. SCHEMATIC DIAGRAM – SCART Board (AEP, UK and Russian models) –

• See page 64 for IC Block Diagrams.

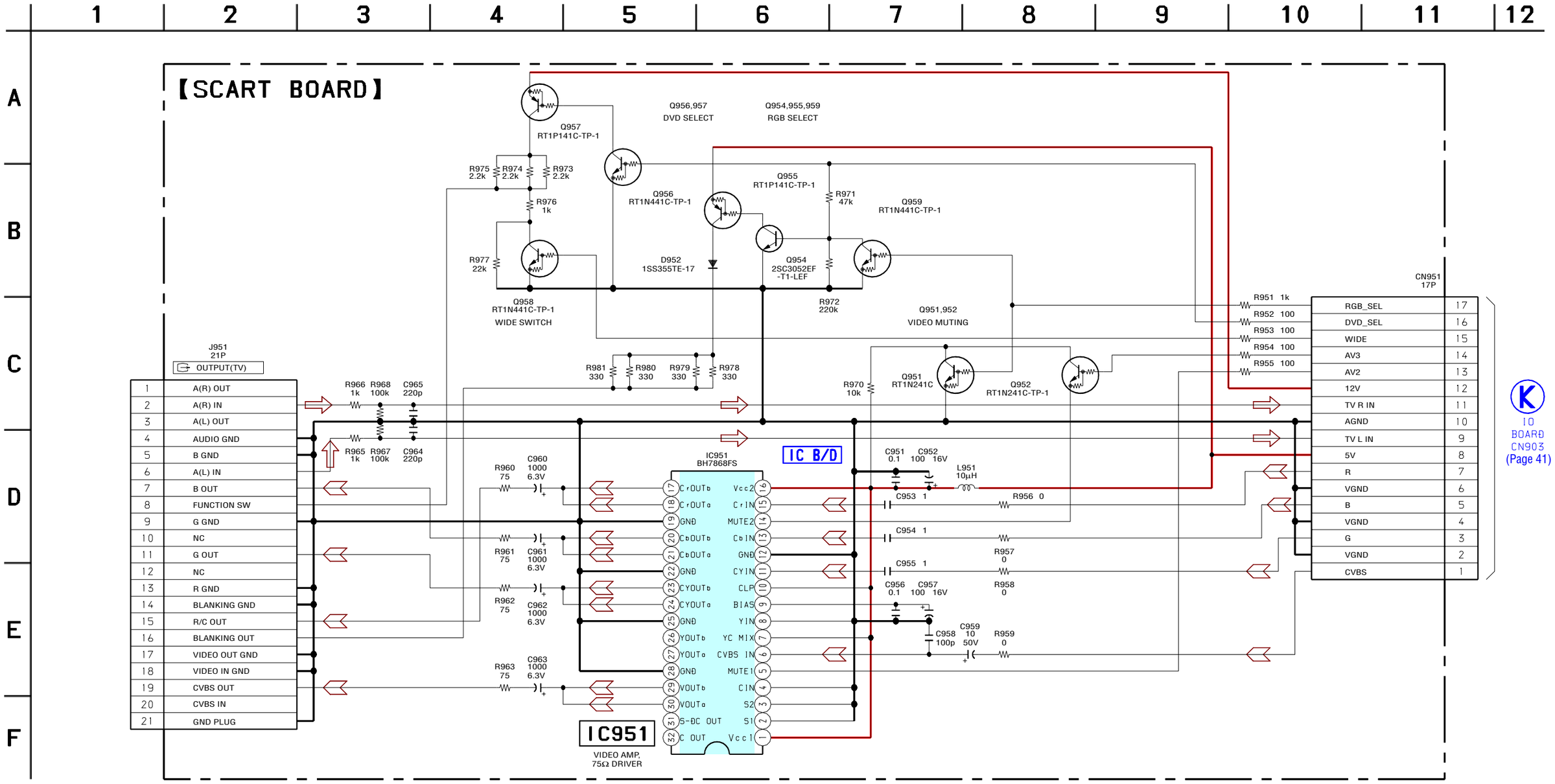

6-24. PRINTED WIRING BOARD – MAIN Board (Component Side) –

• See page 27 for Circuit Boards Location.

: Uses unleaded solder.

• **Semiconductor Location**

Ref. No.	Location
D11	G-5
D501	I-4
D502	I-3
D503	I-3
D504	H-6
IC11	G-6
IC12	G-6
IC13	G-5
IC15	F-7
IC16	E-7
IC501	H-2
IC502	I-3
IC505	C-3
IC506	E-3
IC507	E-2
IC509	B-5
IC510	B-6
IC511	E-5
IC512	C-4
IC513	C-5
IC514	B-5
IC515	F-1
IC518	C-5
IC521	B-4
Q11	H-8
Q502	I-3
Q651	D-4
Q652	D-5
Q653	E-5
Q654	E-5
Q655	D-4
Q656	D-5

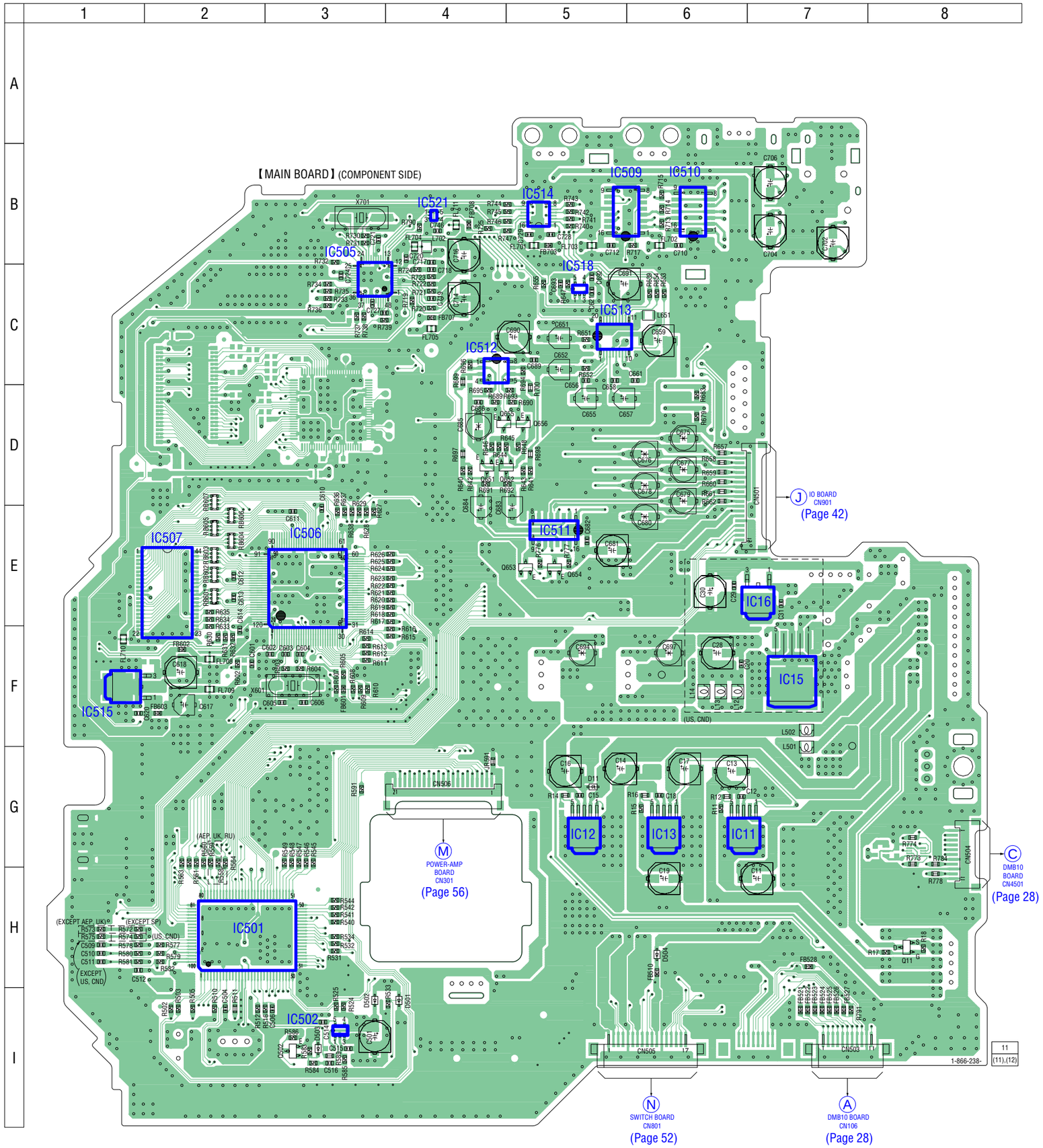

6-25. PRINTED WIRING BOARD – MAIN Board (Conductor Side) –

• See page 27 for Circuit Boards Location. : Uses unleaded solder.

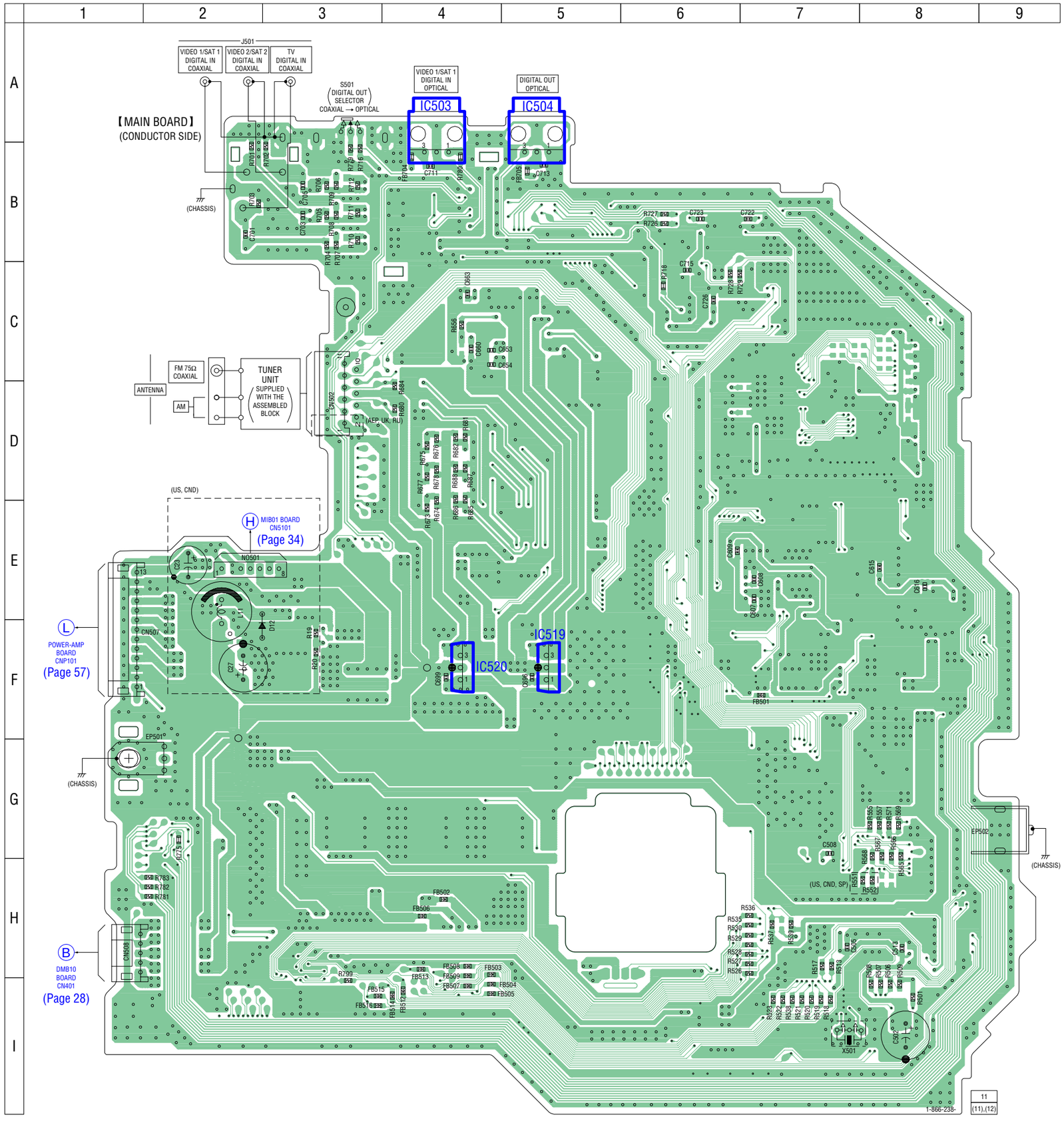

• **Semiconductor Location**

Ref. No.	Location
D12	F-3
IC503	A-4
IC504	A-5
IC519	F-5
IC520	F-4

6-26. SCHEMATIC DIAGRAM – MAIN Board (1/4) –

• See page 61 for Waveforms. • See page 64 for IC Block Diagrams.

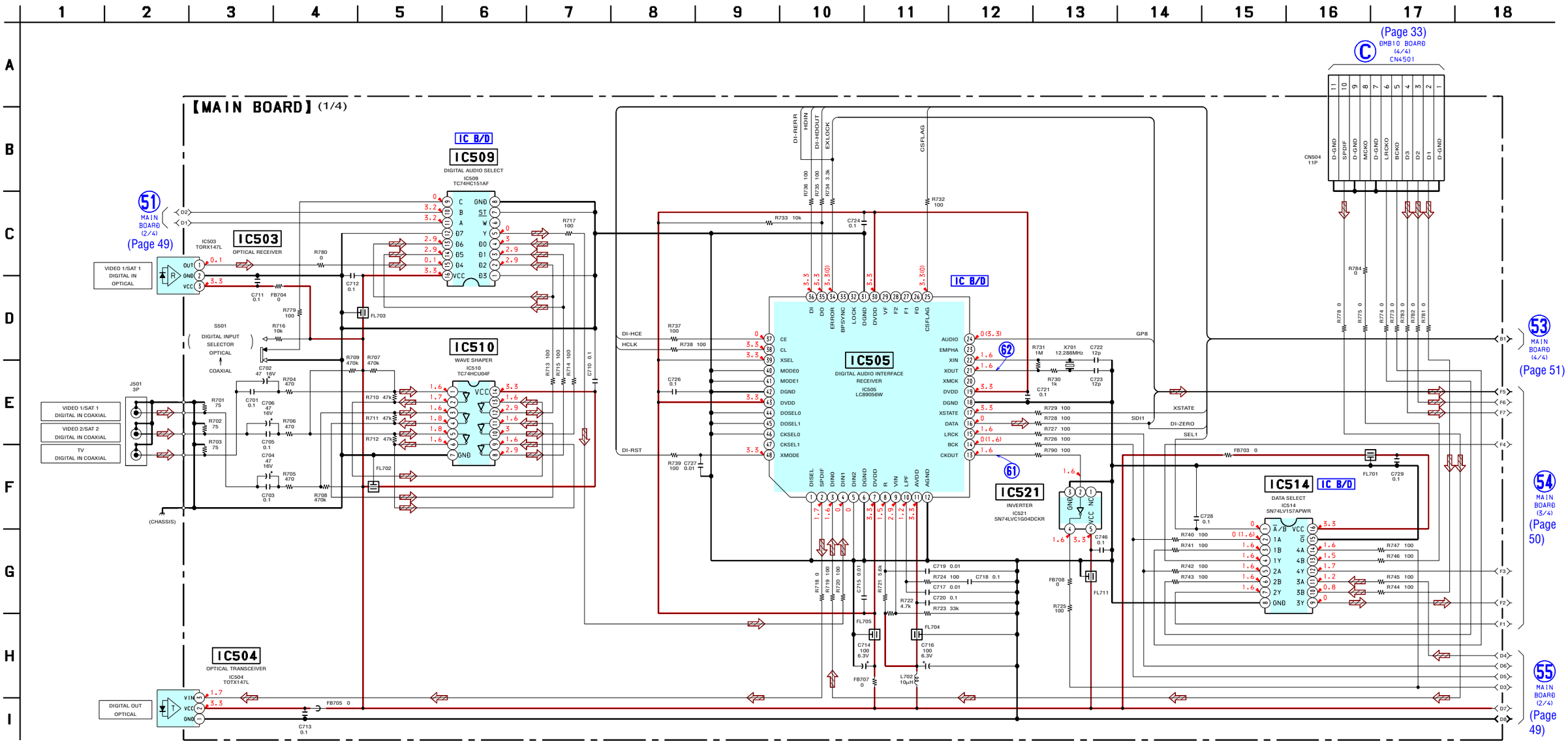

6-27. SCHEMATIC DIAGRAM – MAIN Board (2/4) – • See page 64 for IC Block Diagrams.

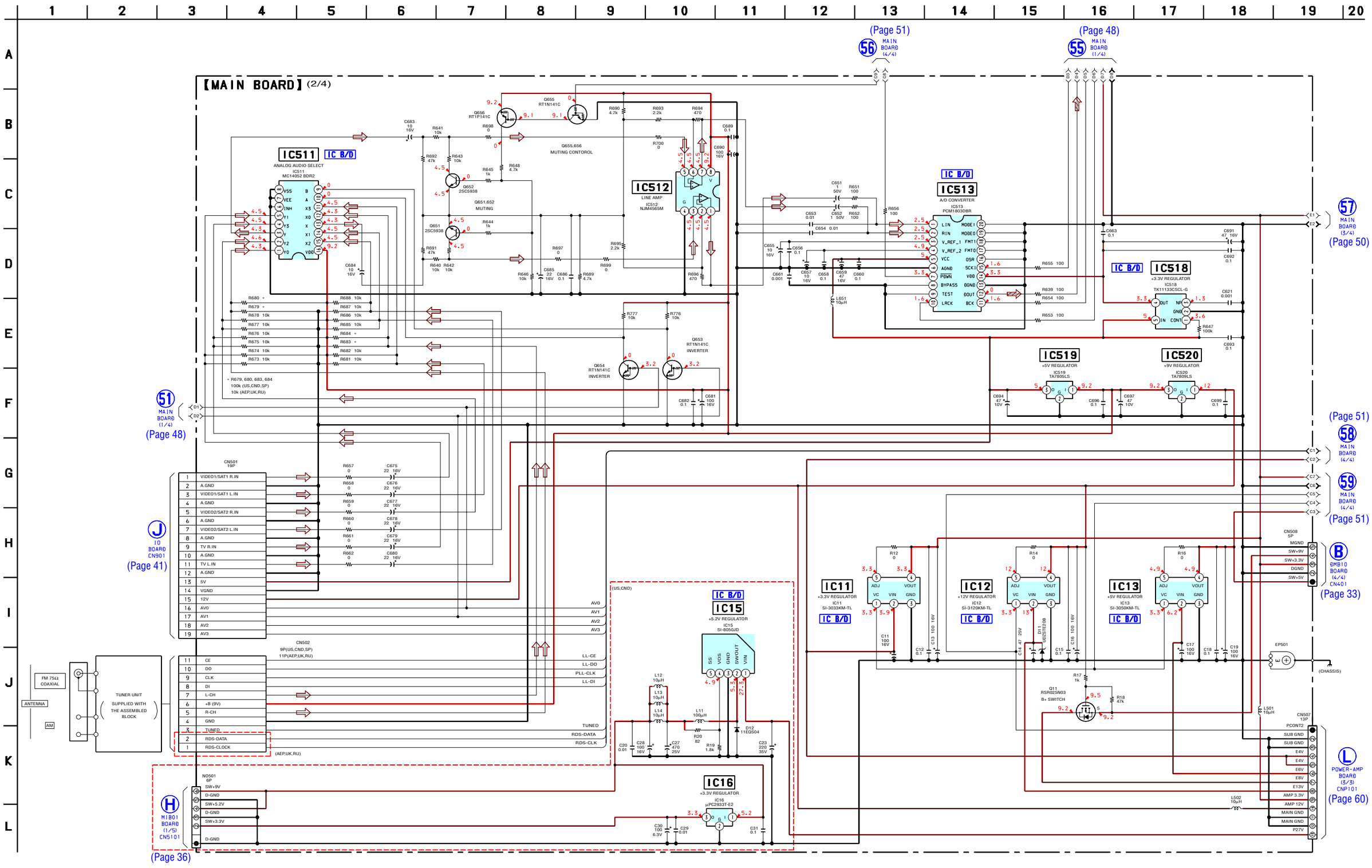

6-28. SCHEMATIC DIAGRAM – MAIN Board (3/4) –

• See page 61 for Waveforms. • See page 73 for IC Pin Function Description.

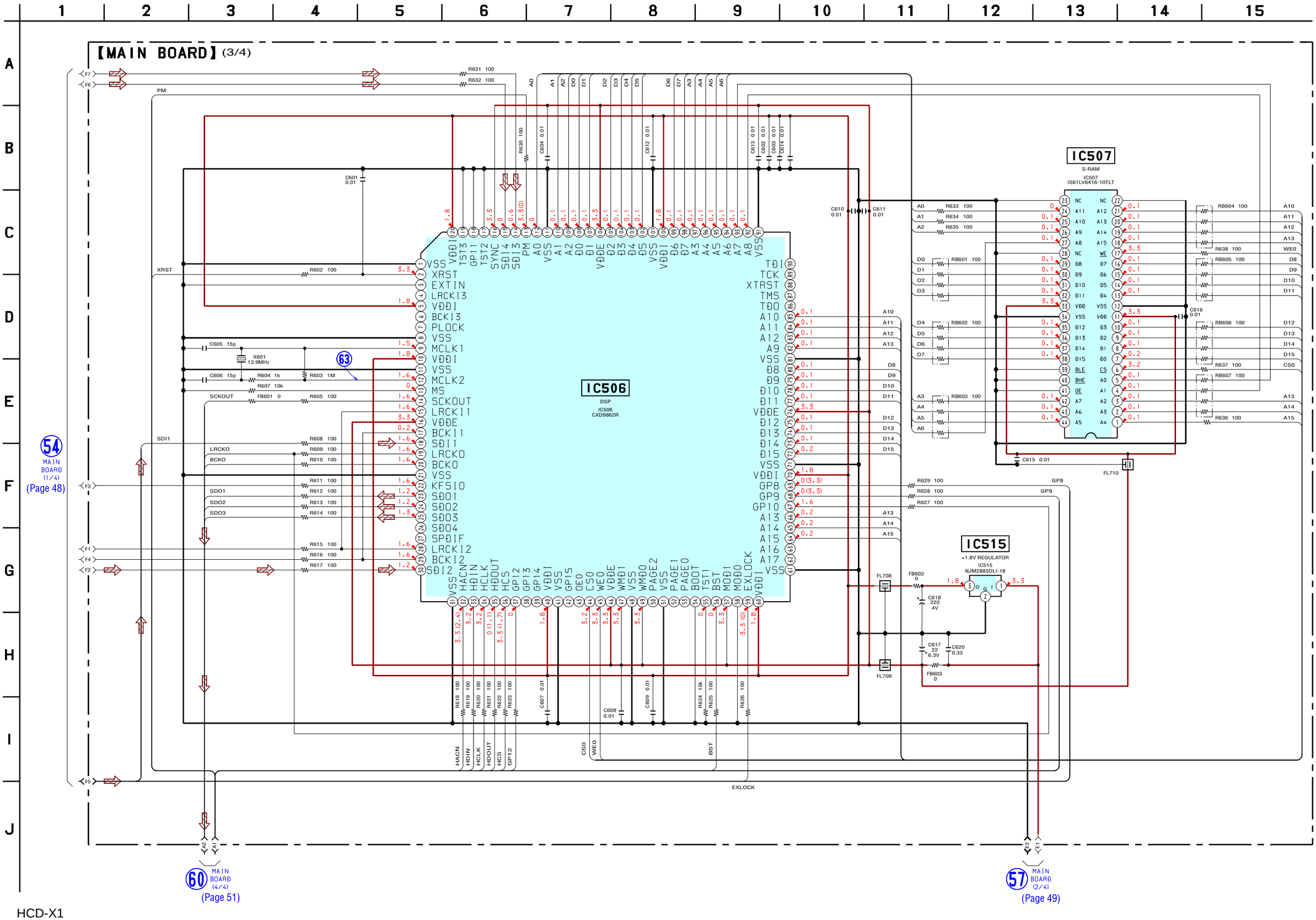

6-29. SCHEMATIC DIAGRAM – MAIN Board (4/4) –

• See page 61 for Waveforms. • See page 64 for IC Block Diagrams. • See page 73 for IC Pin Function Description.

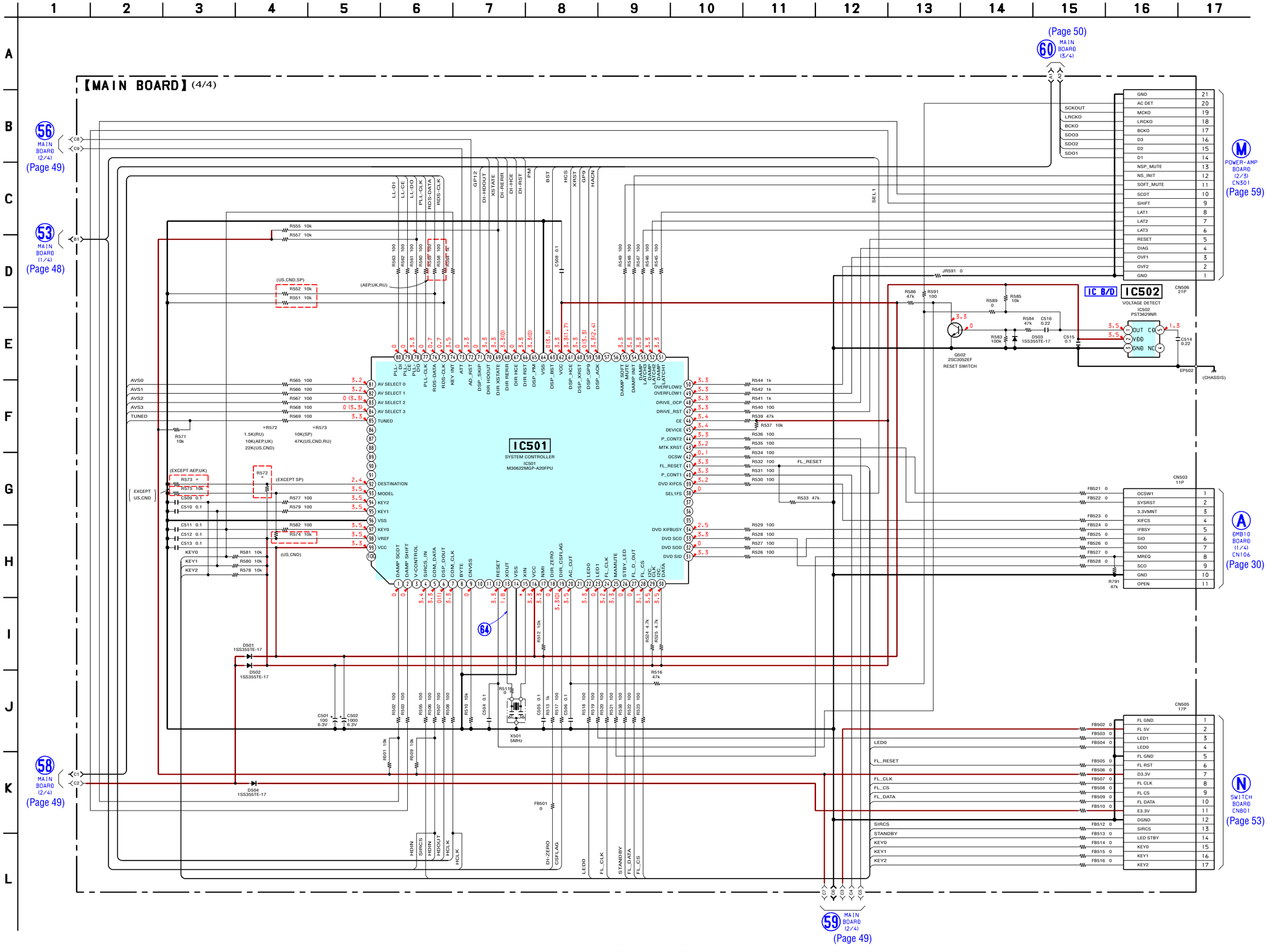

6-30. PRINTED WIRING BOARD – SWITCH Board –

• See page 27 for Circuit Boards Location. : Uses unleaded solder.

【SWITCH BOARD】(COMPONENT SIDE)

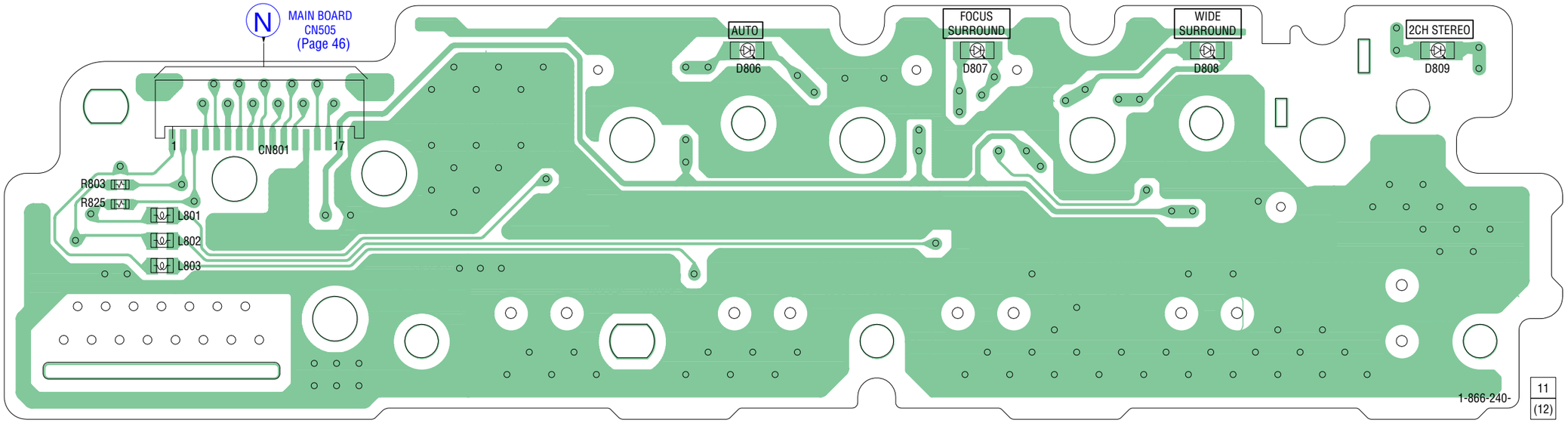

【SWITCH BOARD】(CONDUCTOR SIDE)

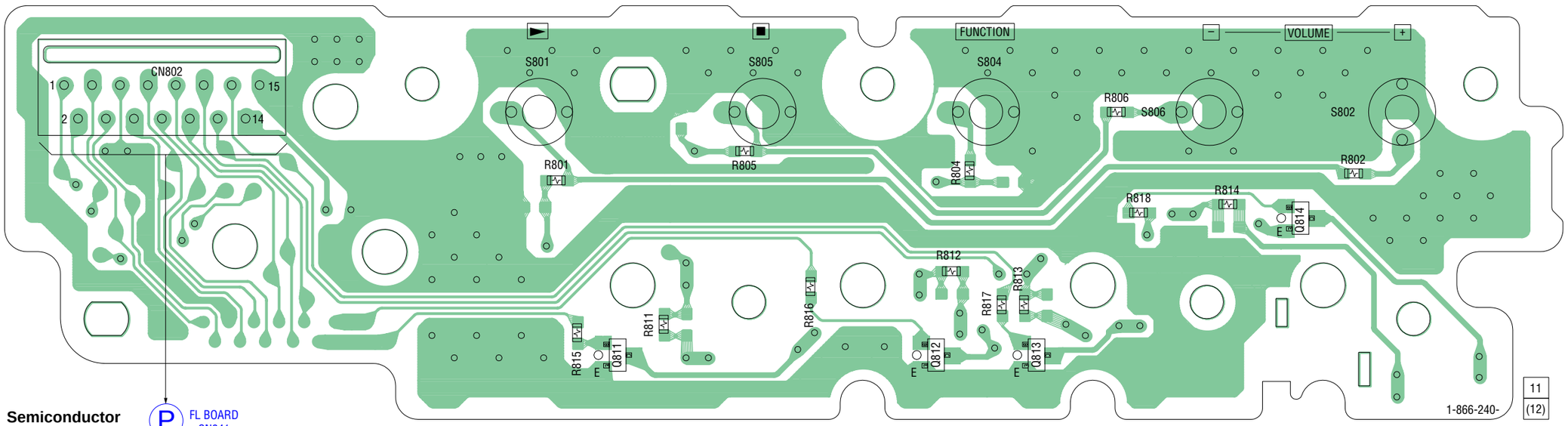

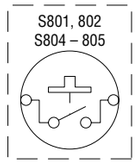

P FL BOARD
CN841
(Page 54)

• **Semiconductor Location**

Ref. No.	Location
D806	B-6
D807	B-8
D808	B-10
D809	B-11
Q811	G-5
Q812	G-8
Q813	G-8
Q814	G-10

6-31. SCHEMATIC DIAGRAM – SWITCH Board –

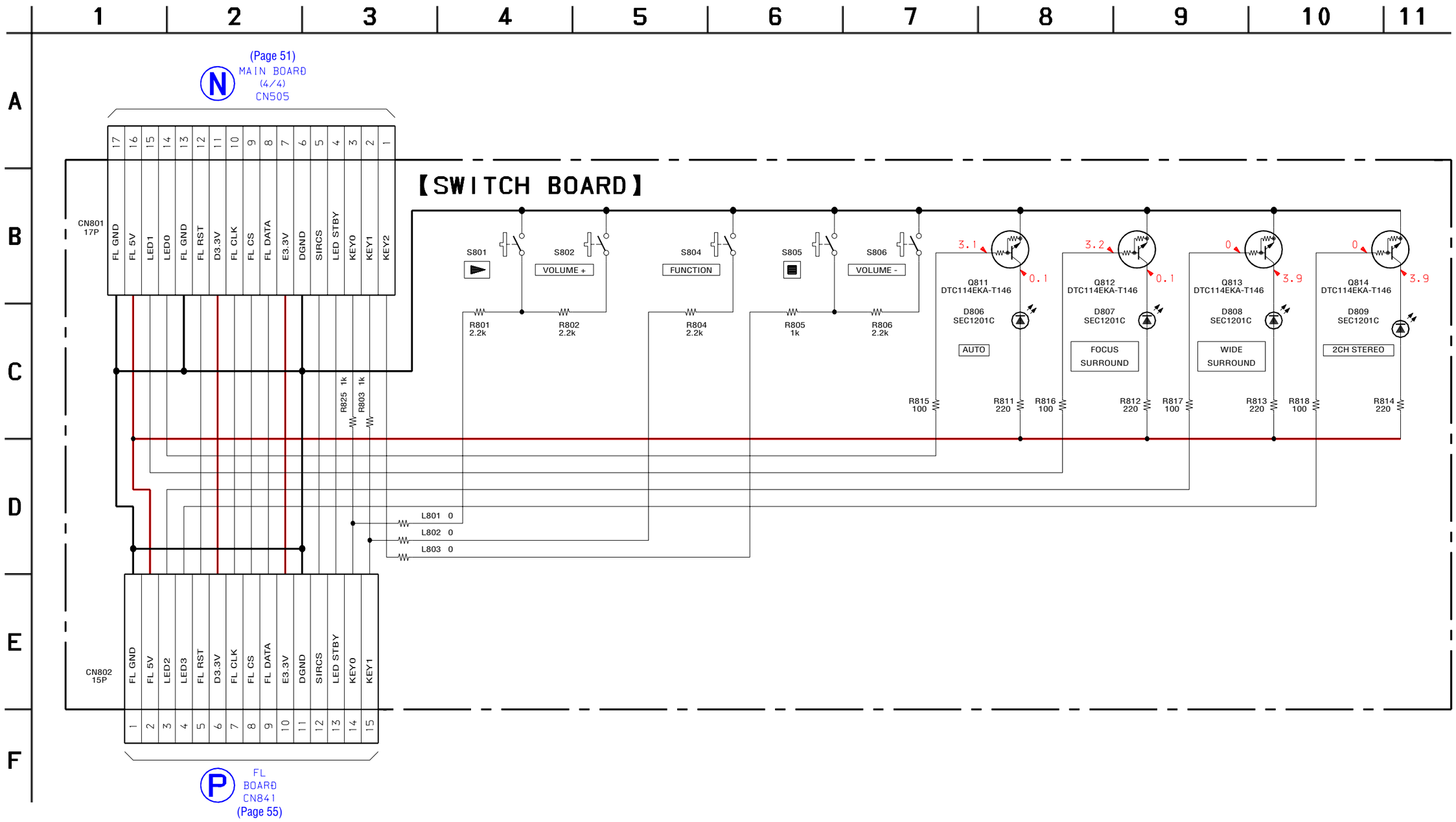

6-32. PRINTED WIRING BOARD – FL Board –

• See page 27 for Circuit Boards Location.

: Uses unleaded solder.

【FL BOARD】(COMPONENT SIDE)

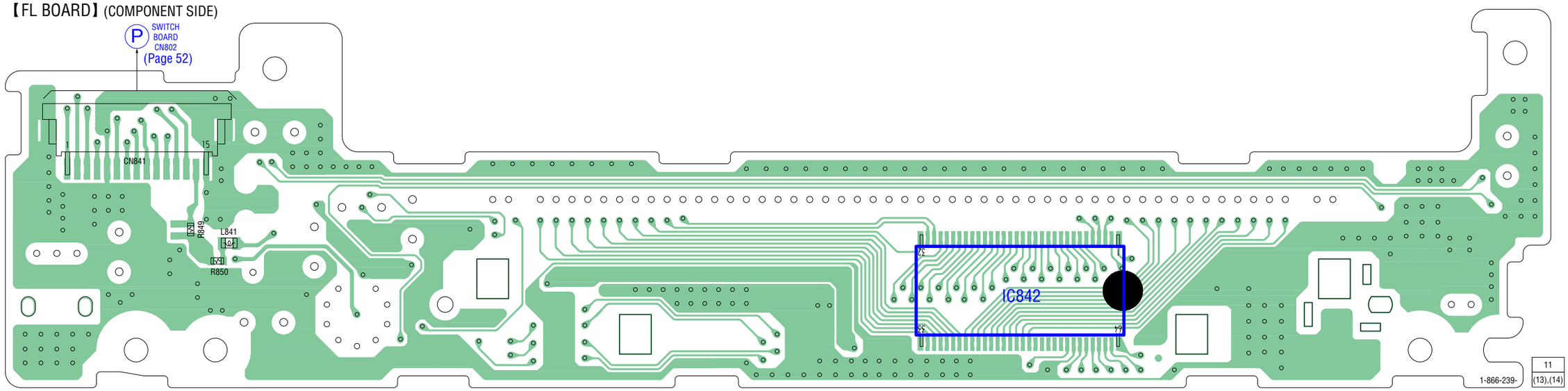

【FL BOARD】(CONDUCTOR SIDE)

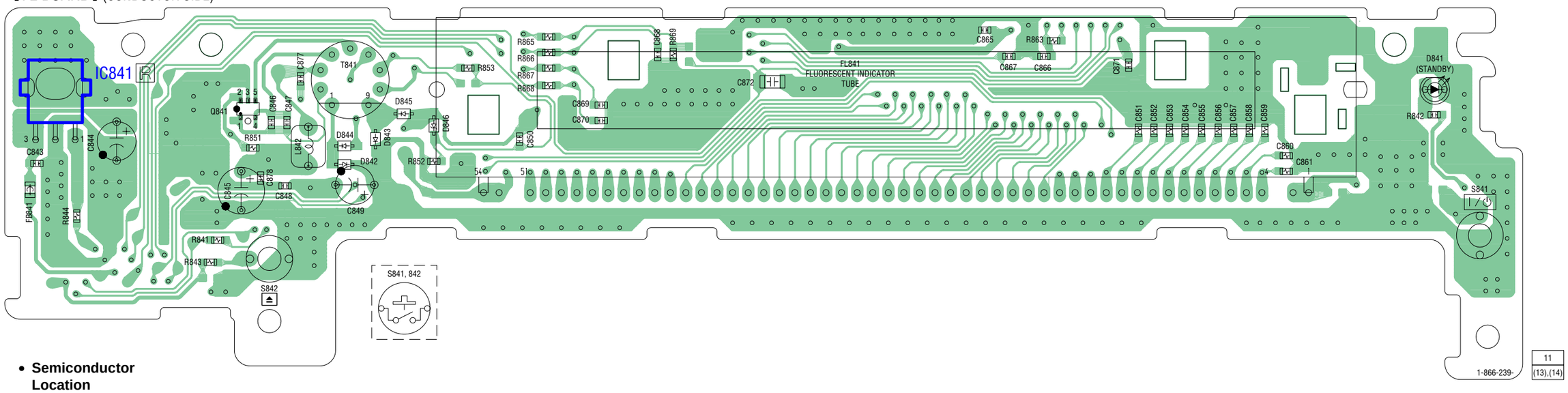

• **Semiconductor Location**

Ref. No.	Location
D841	G-16
D842	G-4
D843	G-5
D844	G-4
D845	G-5
D846	G-5
IC841	G-1
IC842	D-11
Q841	G-3

6-33. SCHEMATIC DIAGRAM – FL Board –

• See page 61 for Waveforms. • See page 64 for IC Block Diagrams.

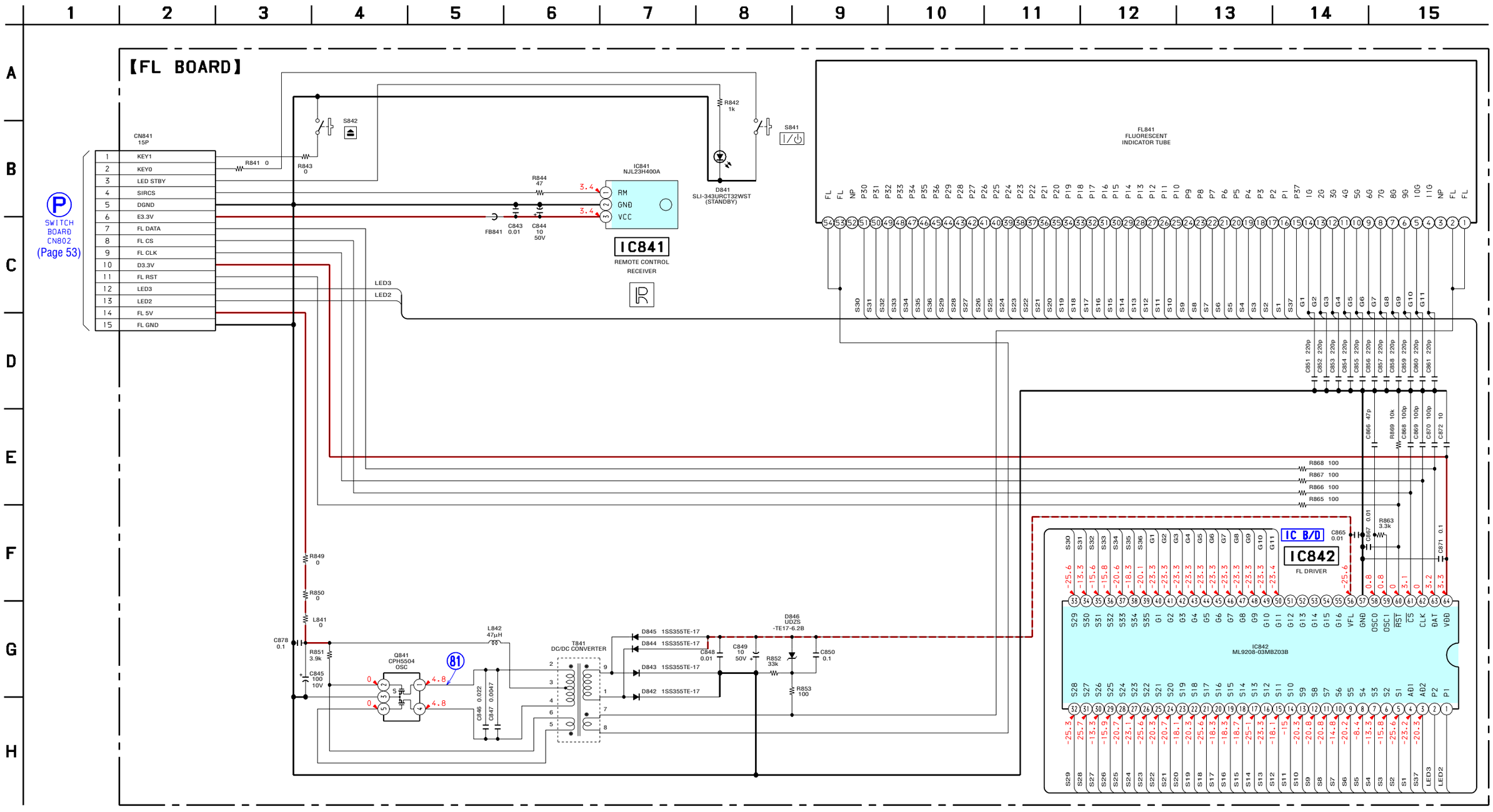

6-34. PRINTED WIRING BOARD – POWER-AMP Board (Component Side) –

• See page 27 for Circuit Boards Location.

: Uses unleaded solder.

- **Semiconductor Location**

Ref. No.	Location
D106	N-16
D107	N-17
D108	N-16
D109	H-15
D110	N-16
D114	M-17
D115	M-17
D132	I-13
IC201	B-10
IC231	F-10
IC232	I-10
IC233	L-10
IC271	E-10
IC301	F-8
IC302	I-8
IC303	L-8
Q143	I-14
Q147	I-13
Q161	H-14
Q162	H-13
Q313	N-2

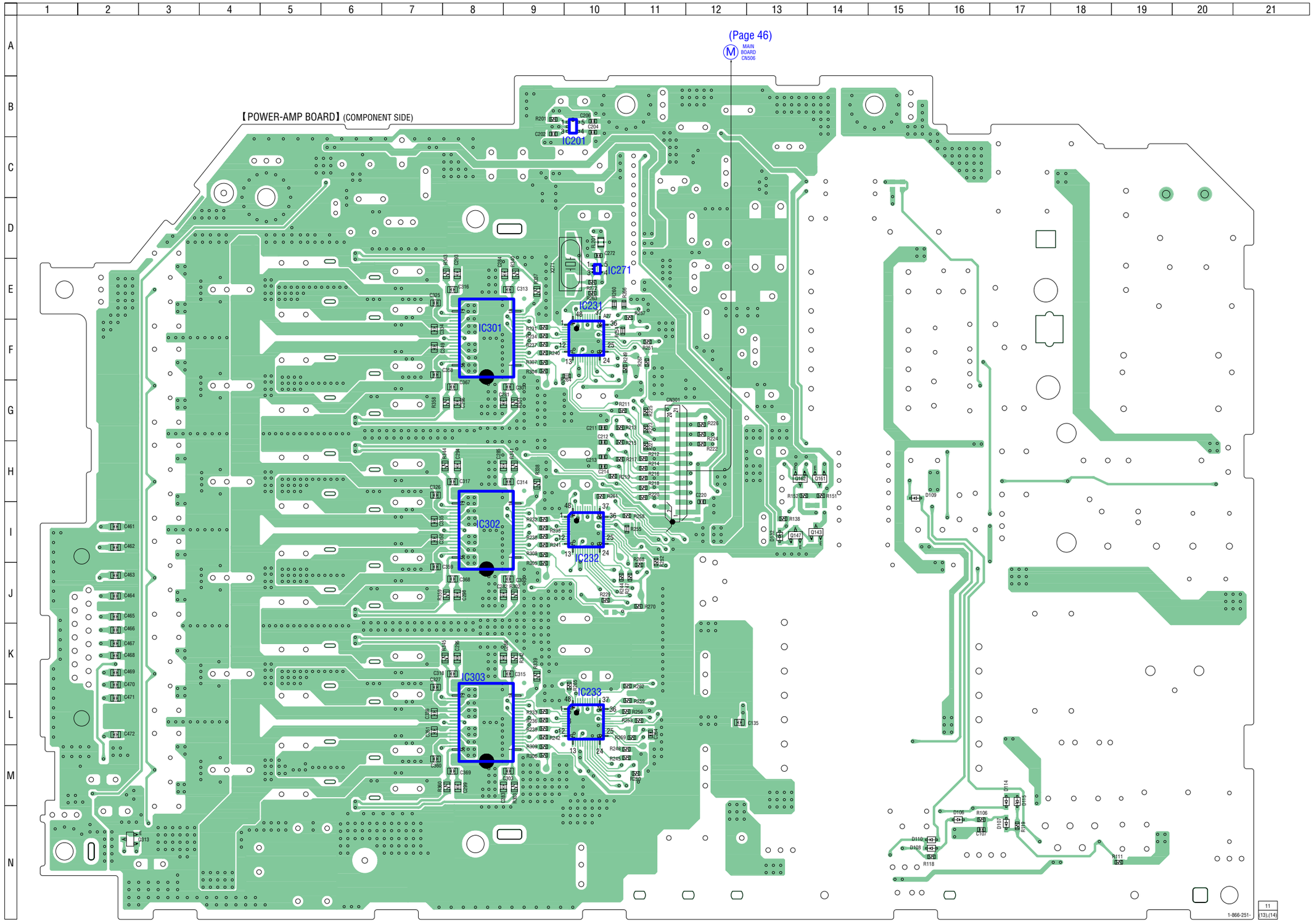

6-35. PRINTED WIRING BOARD – POWER-AMP Board (Conductor Side) –

• See page 27 for Circuit Boards Location. : Uses unleaded solder.

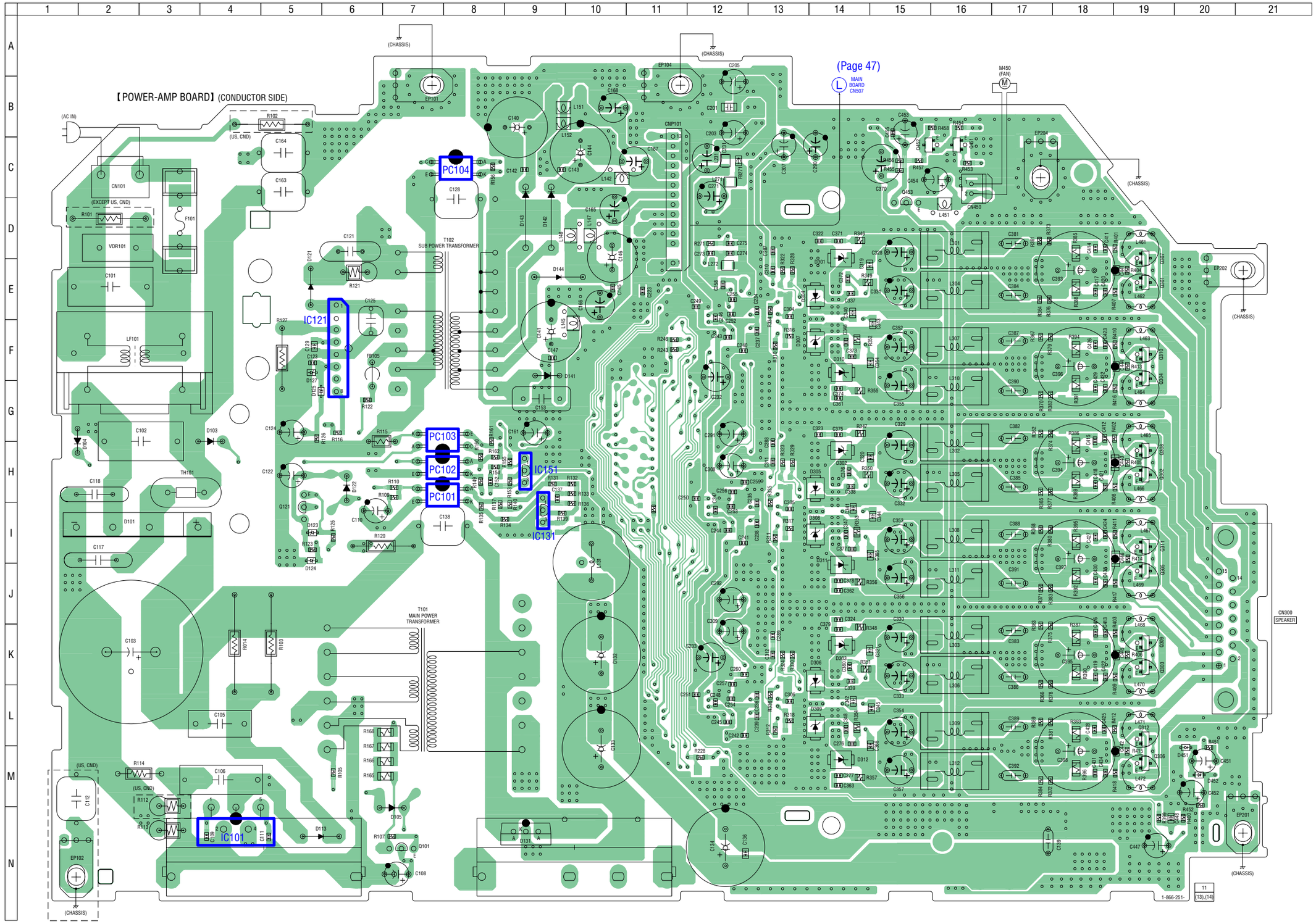

• Semiconductor Location

Ref. No.	Location
D101	I-2
D103	G-4
D104	G-2
D105	N-7
D113	N-5
D121	E-5
D122	H-6
D123	I-5
D124	I-5
D125	G-5
D127	F-5
D131	N-9
D141	F-9
D142	D-9
D143	D-9
D144	E-9
D301	E-14
D302	H-14
D303	K-14
D304	E-14
D305	H-14
D306	K-14
D307	F-14
D308	I-14
D309	L-14
D310	F-14
D311	J-14
D312	M-14
D451	M-20
D452	M-20
IC101	N-4
IC121	F-6
IC131	I-9
IC151	H-9
PC101	H-7
PC102	H-7
PC103	G-7
PC104	C-8
Q101	N-7
Q121	I-5
Q301	E-19
Q302	H-19
Q303	K-19
Q304	F-19
Q305	J-19
Q306	M-19
Q307	D-19
Q308	H-19
Q309	K-19
Q310	F-19
Q311	I-19
Q312	L-19
Q451	C-16
Q452	C-15
Q453	D-15

6-36. SCHEMATIC DIAGRAM – POWER-AMP Board (1/3) –

• See page 64 for IC Block Diagrams.

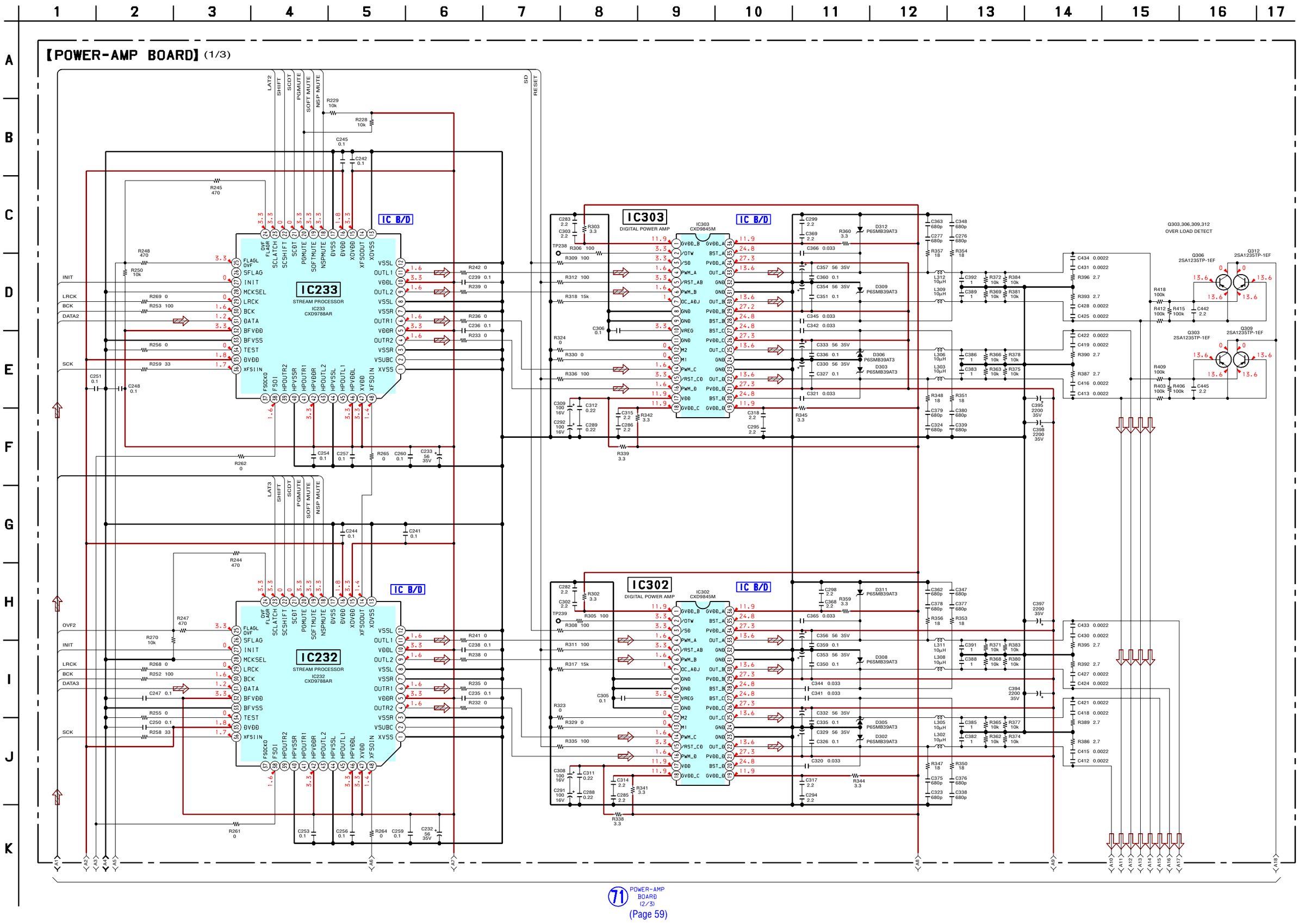

6-37. SCHEMATIC DIAGRAM – POWER-AMP Board (2/3) –

• See page 61 for Waveforms. • See page 64 for IC Block Diagrams.

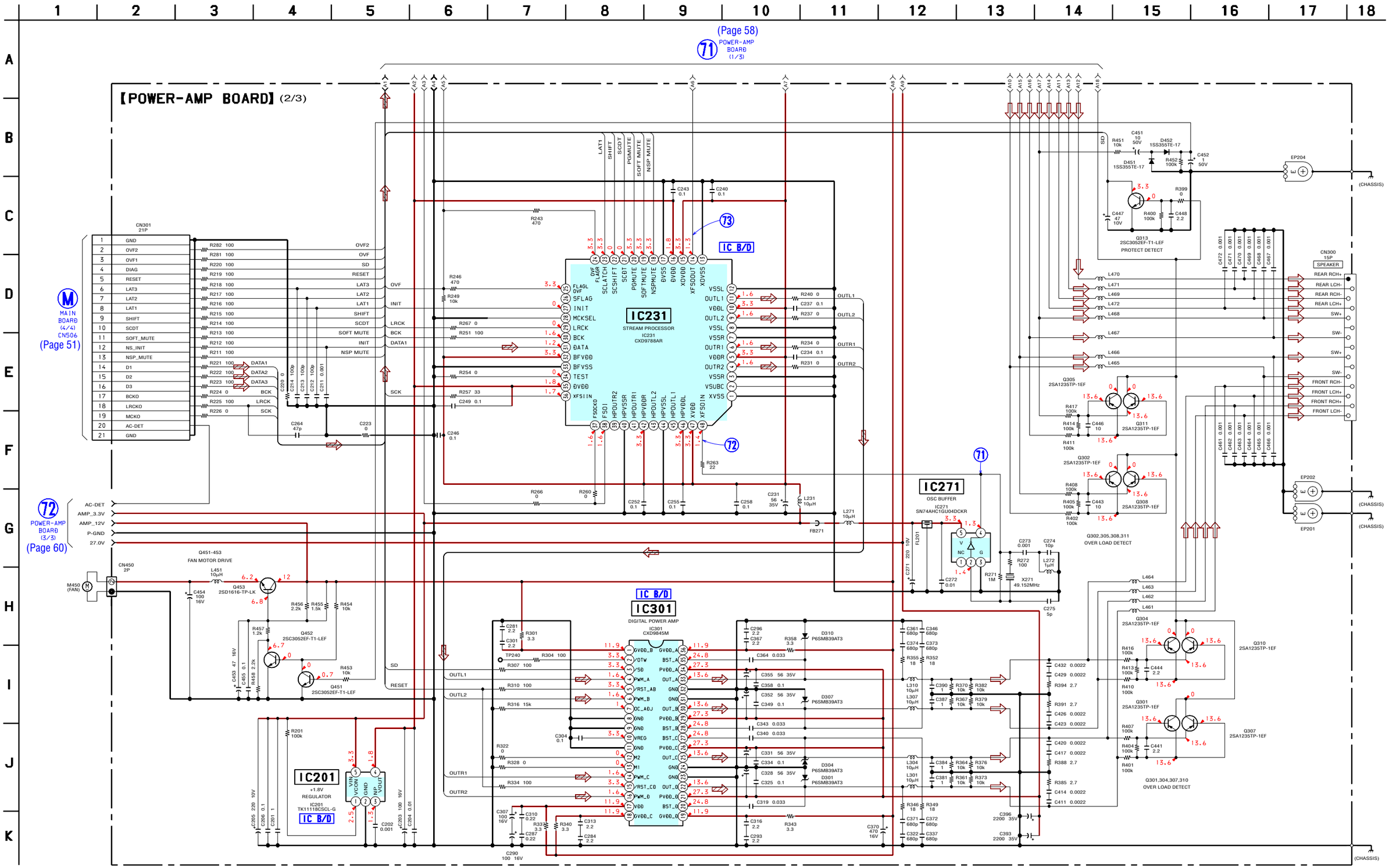

6-38. SCHEMATIC DIAGRAM – POWER-AMP Board (3/3) –

• See page 64 for IC Block Diagrams.

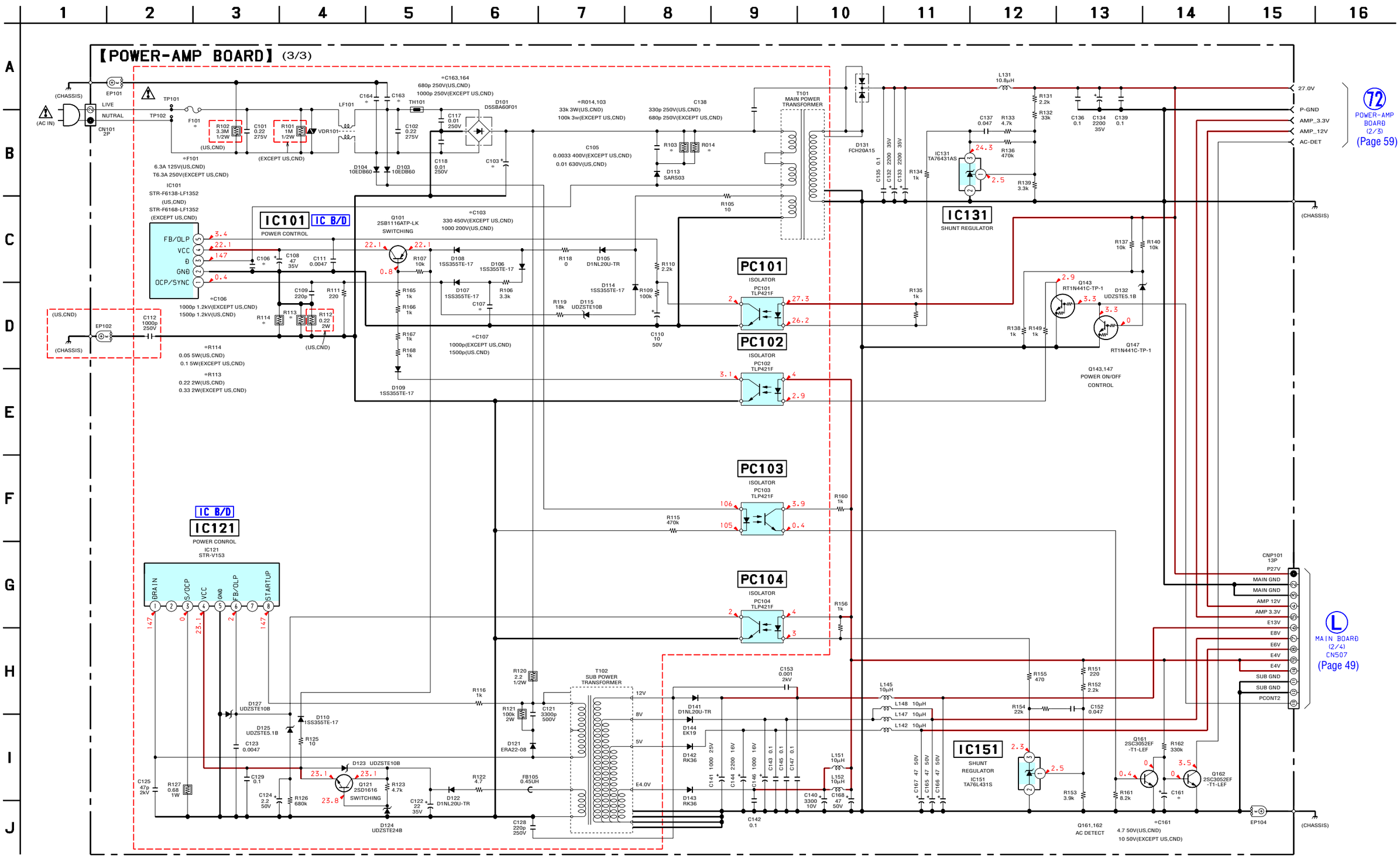

- **Waveforms**

– DMB10 Board –

① **IC102 ⑥ (DVDRF IP)**
(DVD play mode)

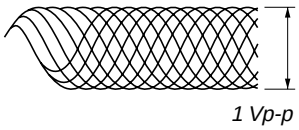

500 mV/DIV, 200 ns/DIV

② **IC102 ⑲④ (YUV1)**
(DVD play mode)

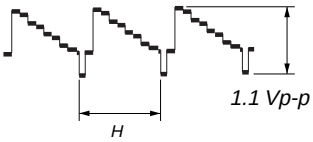

500 mV/DIV, 20 µs/DIV

③ **IC102 ⑲⑥ (YUV2)**
(DVD play mode)

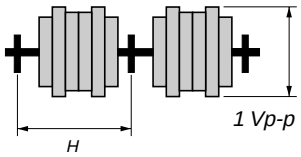

500 mV/DIV, 20 µs/DIV

④ **IC102 ⑲⑧ (YUV3)**
(DVD play mode)

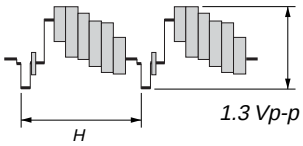

500 mV/DIV, 20 µs/DIV

⑤ **IC102 ⑳⓪ (YUV4)**
(DVD play mode)

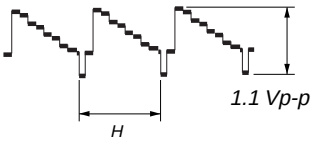

500 mV/DIV, 20 µs/DIV

⑥ **IC102 ⑳②(YUV5)**
(DVD play mode)

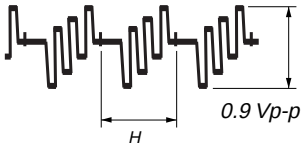

500 mV/DIV, 20 µs/DIV

⑦ **IC102 ⑳③ (YUV6)**
(DVD play mode)

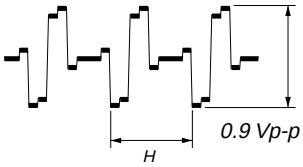

500 mV/DIV, 20 µs/DIV

⑧ **IC102 ㉑③ (ALRCK)**

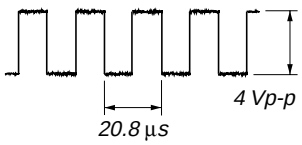

2 V/DIV, 10 µs/DIV

⑨ **IC102 ㉑④ (ABCK)**

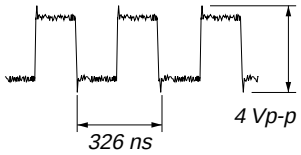

2 V/DIV, 100 ns/DIV

⑩ **IC102 ㉑⑤ (ACLK)**

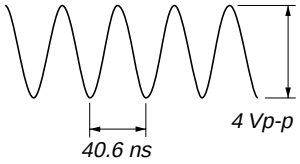

2 V/DIV, 20 ns/DIV

⑪ **IC102 ㉒⑧ (XTALO)**

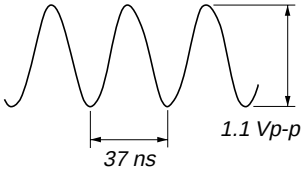

500 mV/DIV, 10 ns/DIV

– MIB01 Board –

㉑ **IC503 ② (CLKI)**
(DVD play mode)

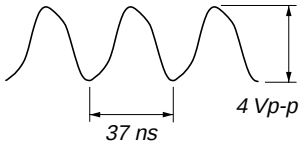

2 V/DIV, 20 ns/DIV

㉒ **IC503 ㊵ (CLKO)**
(DVD play mode)

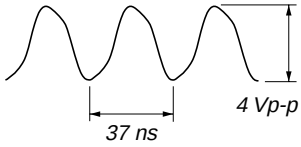

2 V/DIV, 20 ns/DIV

㉓ **IC506 ㉜ (CLKIN)**
(DVD play mode)

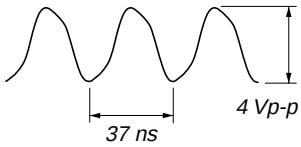

2 V/DIV, 20 ns/DIV

㉔ **IC506 ㊲ (CR/B)**
(DVD play mode)

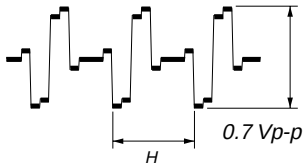

500 mV/DIV, 20 µs/DIV

㉕ **IC506 ㊳ (CB/R)**
(DVD play mode)

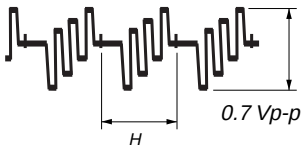

500 mV/DIV, 20 µs/DIV

㉖ **IC506 ㊴ (Y/G)**
(DVD play mode)

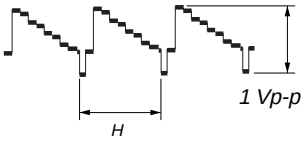

500 mV/DIV, 20 µs/DIV

27 IC506 ㊷ (C)
(DVD play mode)

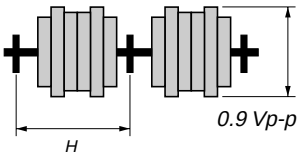

500 mV/DIV, 20 µs/DIV

28 IC506 ㊸ (Y)
(DVD play mode)

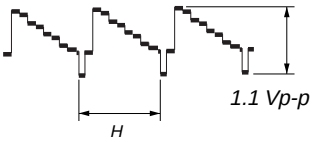

500 mV/DIV, 20 µs/DIV

29 IC506 ㊹ (V)
(DVD play mode)

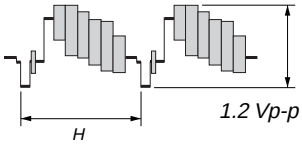

500 mV/DIV, 20 µs/DIV

30 IC601 ㉒ (X0)

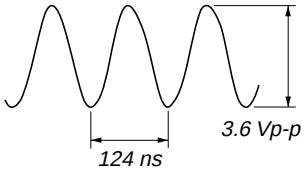

1 V/DIV, 50 ns/DIV

– IO Board –

41 IC902 ⑤ (IN3)
(DVD play mode)

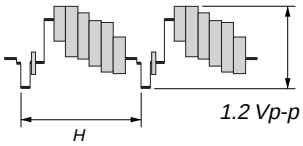

500 mV/DIV, 20 µs/DIV

42 IC903 ⑤ (IN3)
(DVD play mode)

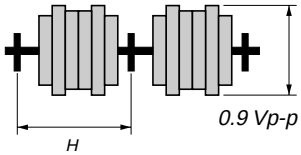

500 mV/DIV, 20 µs/DIV

43 IC904 ⑤ (IN3)
(DVD play mode)

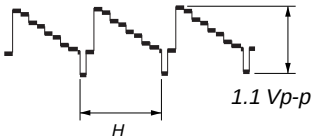

500 mV/DIV, 20 µs/DIV

44 IC901 ④ (CIN)
(DVD play mode)

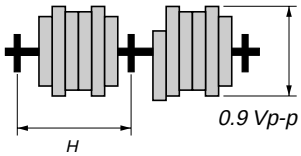

500 mV/DIV, 20 µs/DIV

45 IC901 ⑥ (CVBS IN)
(DVD play mode)

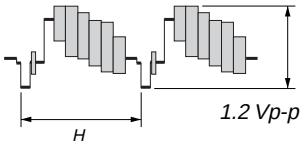

500 mV/DIV, 20 µs/DIV

46 IC901 ⑧ (Y IN)
(DVD play mode)

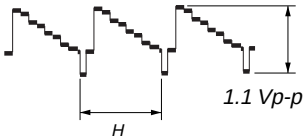

500 mV/DIV, 20 µs/DIV

47 IC901 ⑪ (CYIN)
(DVD play mode)

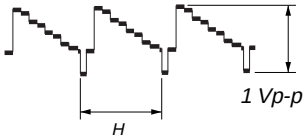

500 mV/DIV, 20 µs/DIV

48 IC901 ⑬ (CbIN)
(DVD play mode)

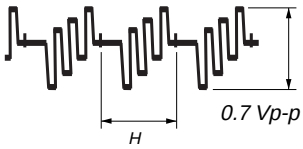

500 mV/DIV, 20 µs/DIV

49 IC901 ⑮ (CrIN)
(DVD play mode)

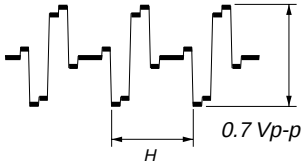

500 mV/DIV, 20 µs/DIV

50 IC901 ⑰ (CrOUTb)
(DVD play mode)

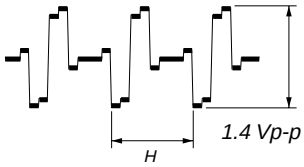

1 V/DIV, 20 µs/DIV

51 IC901 ⑳ (CbOUTb)
(DVD play mode)

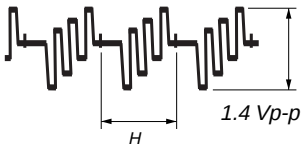

1 V/DIV, 20 µs/DIV

52 IC901 ㉓ (CYOUTb)
(DVD play mode)

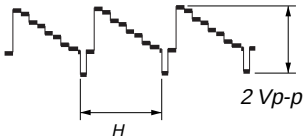

1 V/DIV, 20 µs/DIV

53 IC901 ㉖ (YOUTb) (DVD play mode)

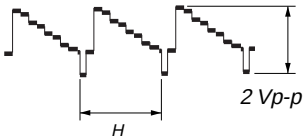

1 V/DIV, 20 µs/DIV

54 IC901 ㉙ (VOUTb) (DVD play mode)

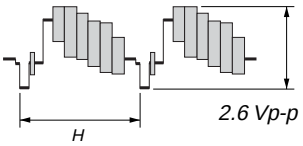

1 V/DIV, 20 µs/DIV

55 IC901 ㉜ (C OUT) (DVD play mode)

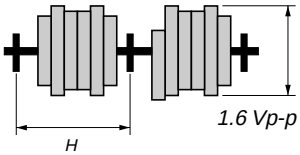

1 V/DIV, 20 µs/DIV

– MAIN Board –

61 IC505 ⑬ (CKOUT)

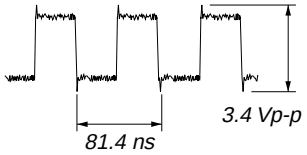

1 V/DIV, 20 ns/DIV

62 IC505 ㉑ (XOUT)

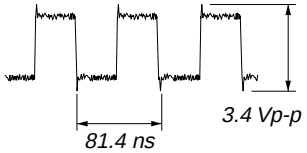

1 V/DIV, 20 ns/DIV

63 IC506 ⑫ (MCLK2)

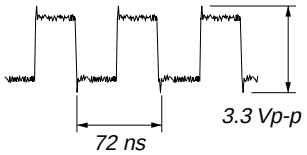

1 V/DIV, 20 ns/DIV

64 IC501 ⑬ (XOUT)

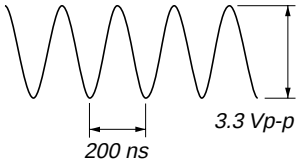

1 V/DIV, 100 ns/DIV

– FL Board –

81 Q841 ①

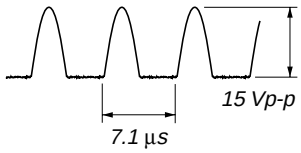

5 V/DIV, 5 µs/DIV

– POWER-AMP Board –

71 IC271 ④

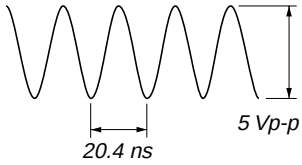

2 V/DIV, 10 ns/DIV

72 IC231 ㊽ (XFSOIN)

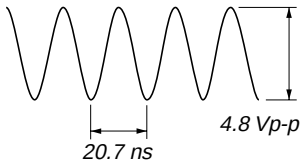

2 V/DIV, 10 ns/DIV

73 IC231 ⑭ (XFSOOUT)

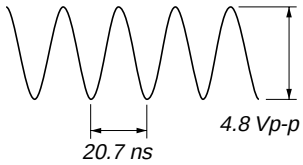

2 V/DIV, 10 ns/DIV

- **IC Block Diagrams**

– DMB10 Board –

IC105, 107 TK11133CSCL-G

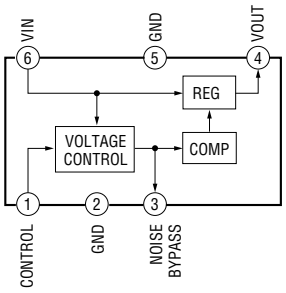

– MIB01 Board –

IC501, 508 TK11125CSCL-G

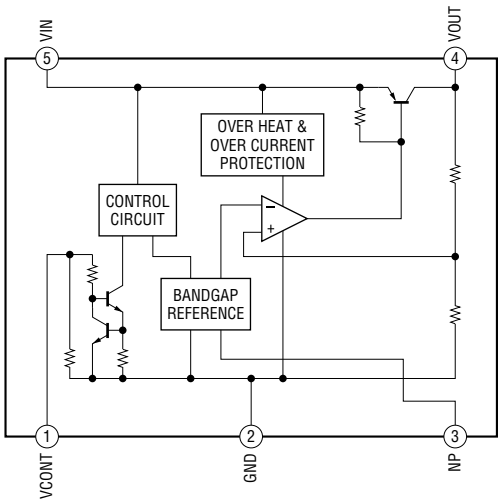

IC505 MM1562FFBE

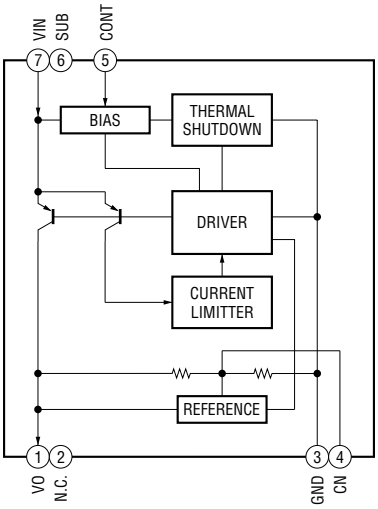

IC602 SII9030CTU

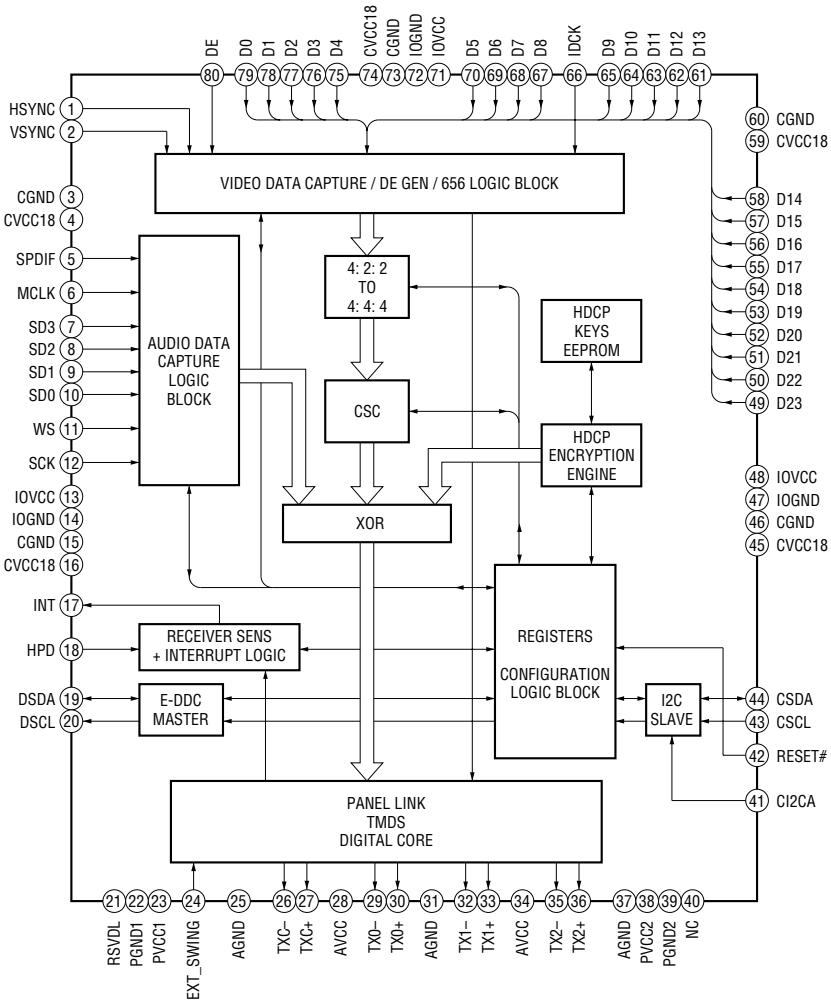

IC604 TK11218CMCL-G

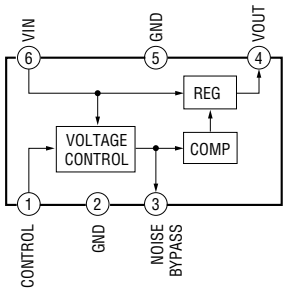

IC605 TK11250CMCL-G

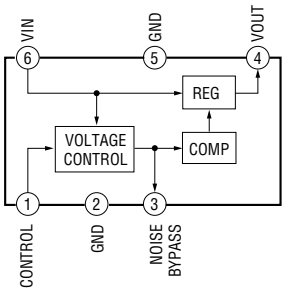

IC606 TK11133CMCL-G

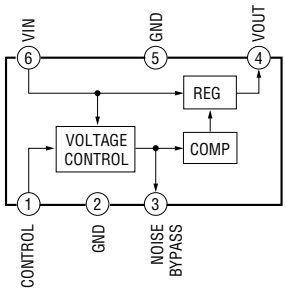

IC607 TK11233CMCL-G

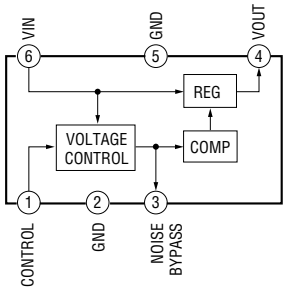

IC608 SN74AHCT541PWR

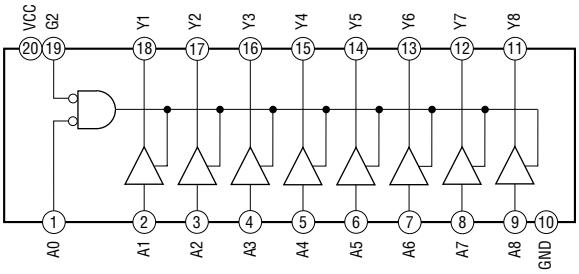

– IO Board –

IC901 BH7868FS-E2

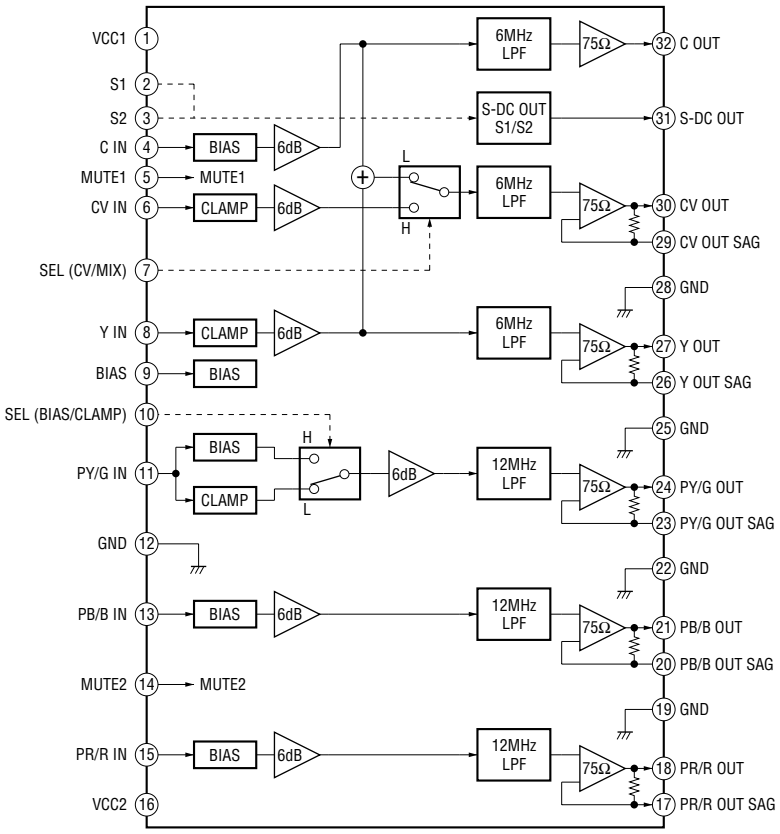

IC902 – 904 NJM2235V (TE2)

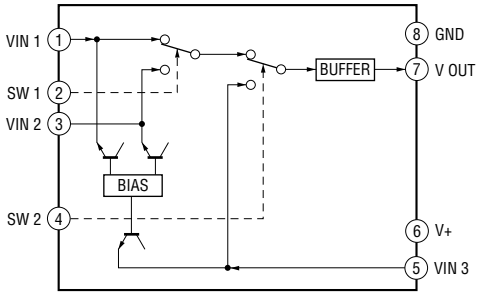

– SCART Board –

IC951 BH7868FS-E2

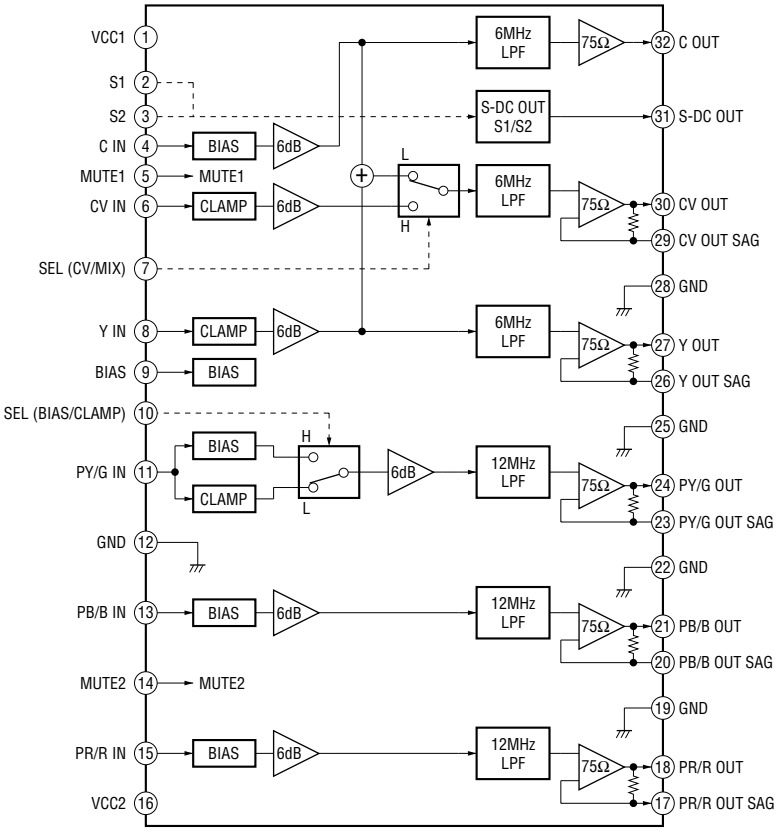

– MAIN Board –

IC11 SI-3033KM-TL

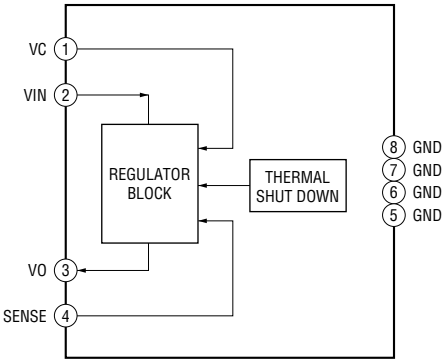

IC12 SI-3120KM-TL

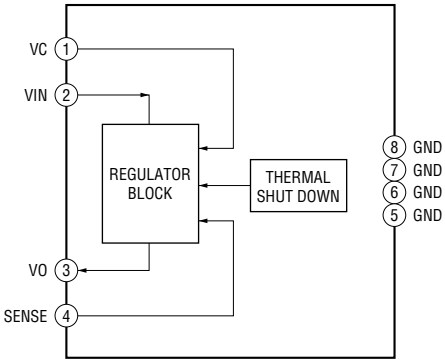

IC13 SI-3050KM-TL

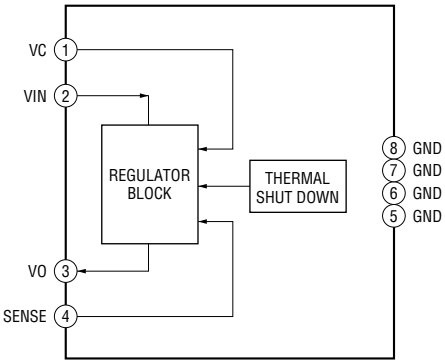

IC15 SI-8050JD-TP

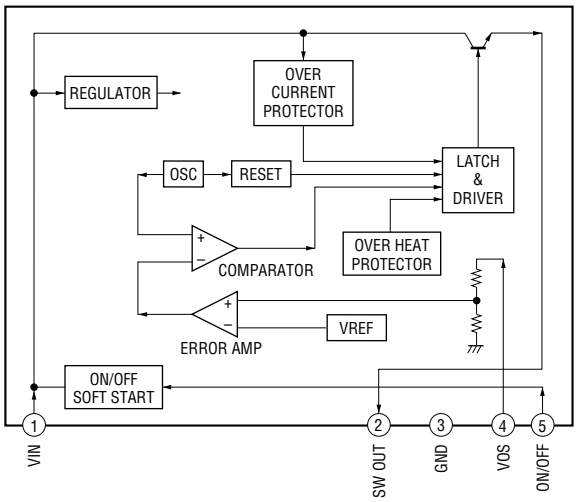

IC502 PST3629NR

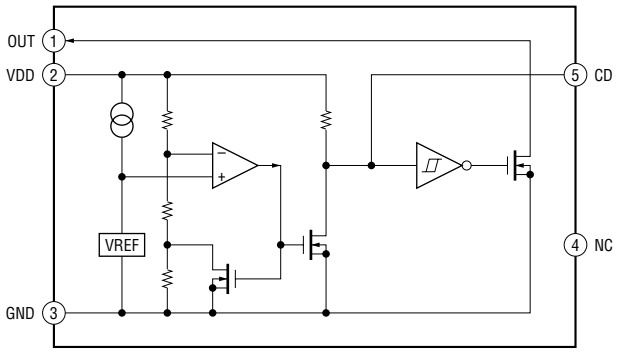

IC505 LC89056W-E

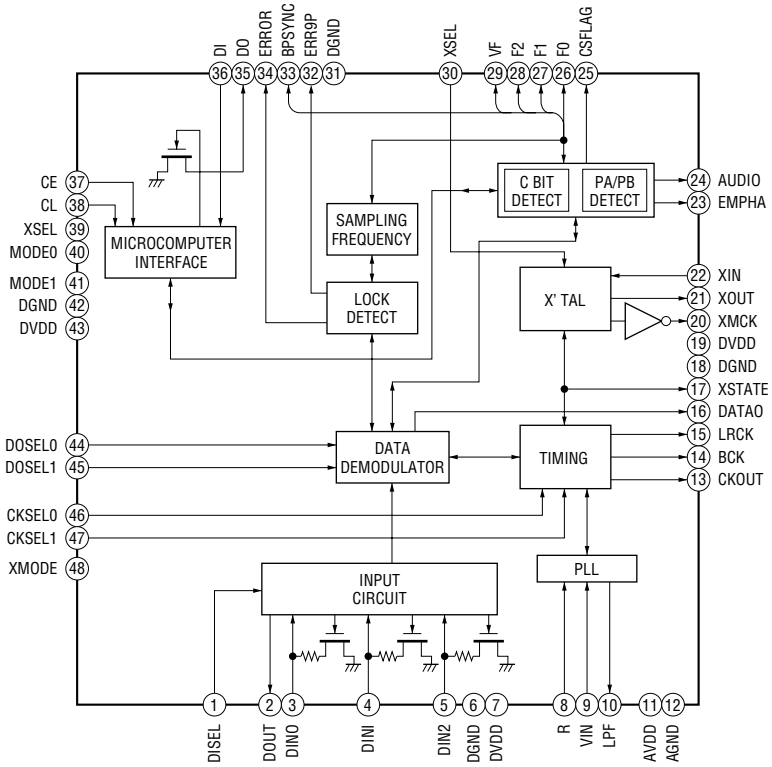

IC509 TC74HC151AF (EL)

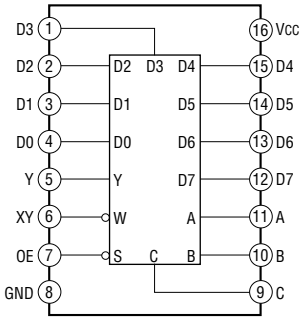

IC511 MC14052 BDR2

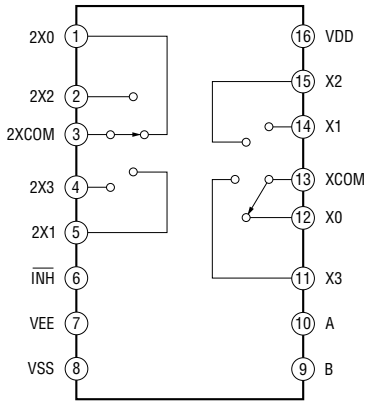

IC513 PCM1803DBR

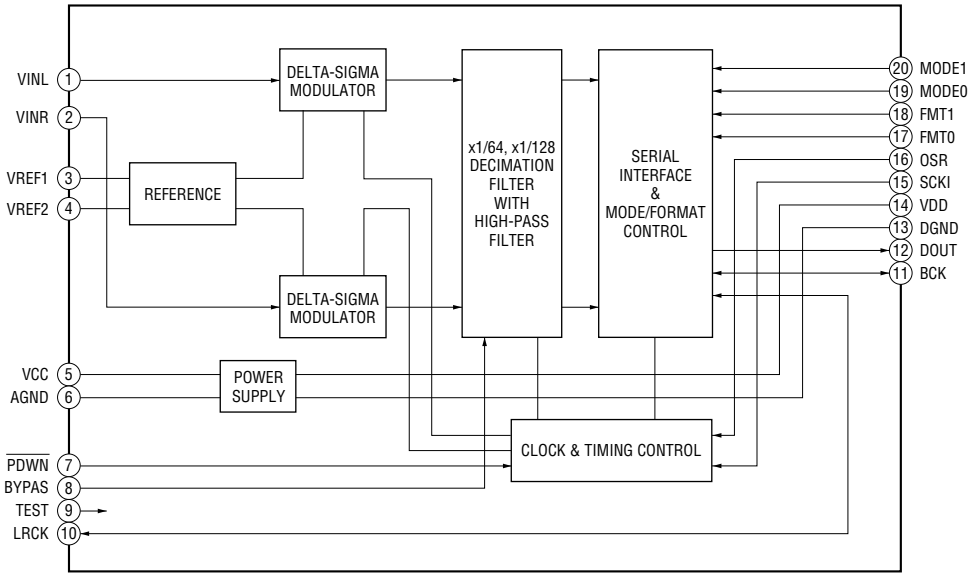

IC514 SN74LV157APWR

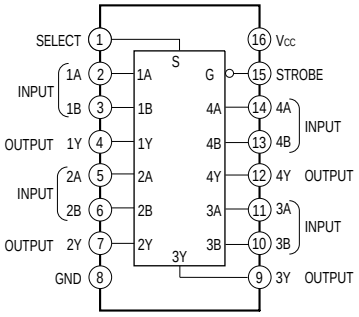

IC518 TK11133CSCL-G

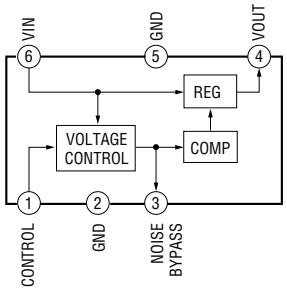

– FL Board –

IC842 ML9208-03MBZ03B

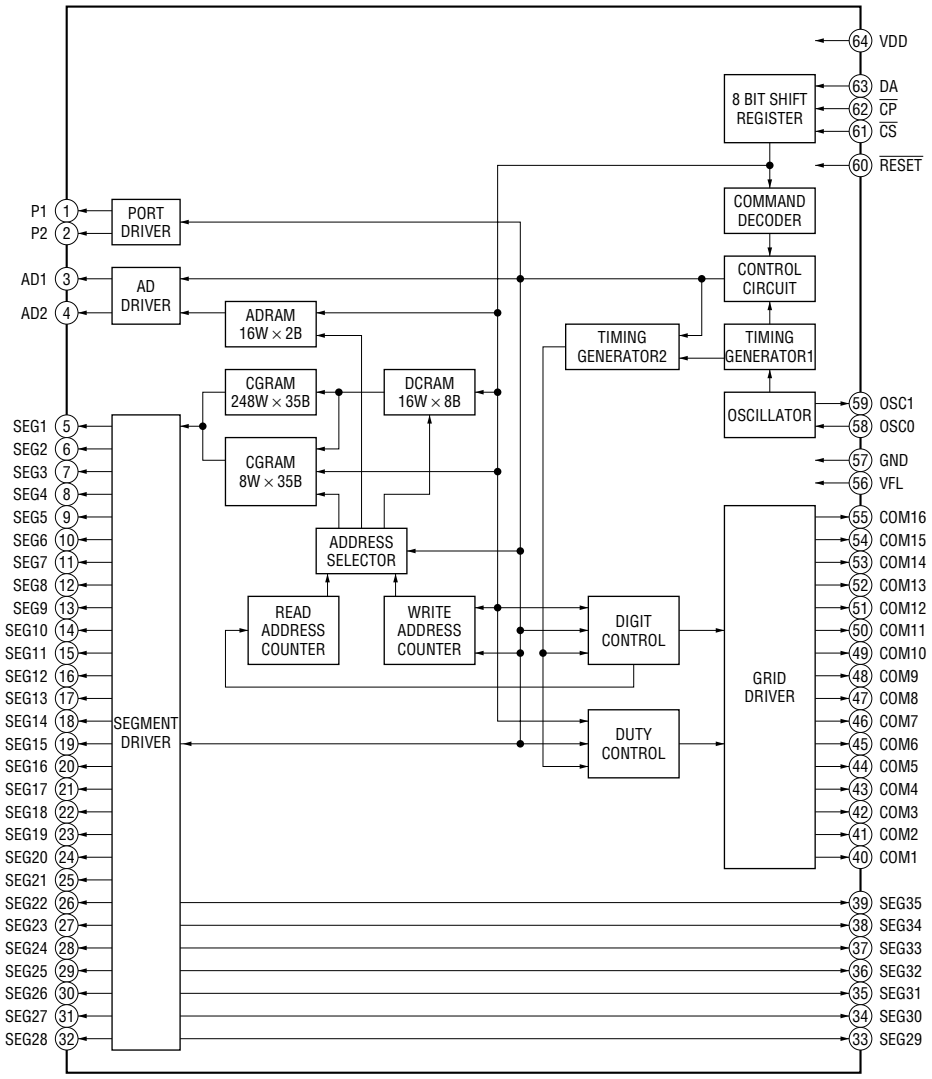

– POWER-AMP Board –

IC101 STR-F6138-LF1352 (US, Canadian models)
STR-F6168-LF1352 (Except US, Canadian models)

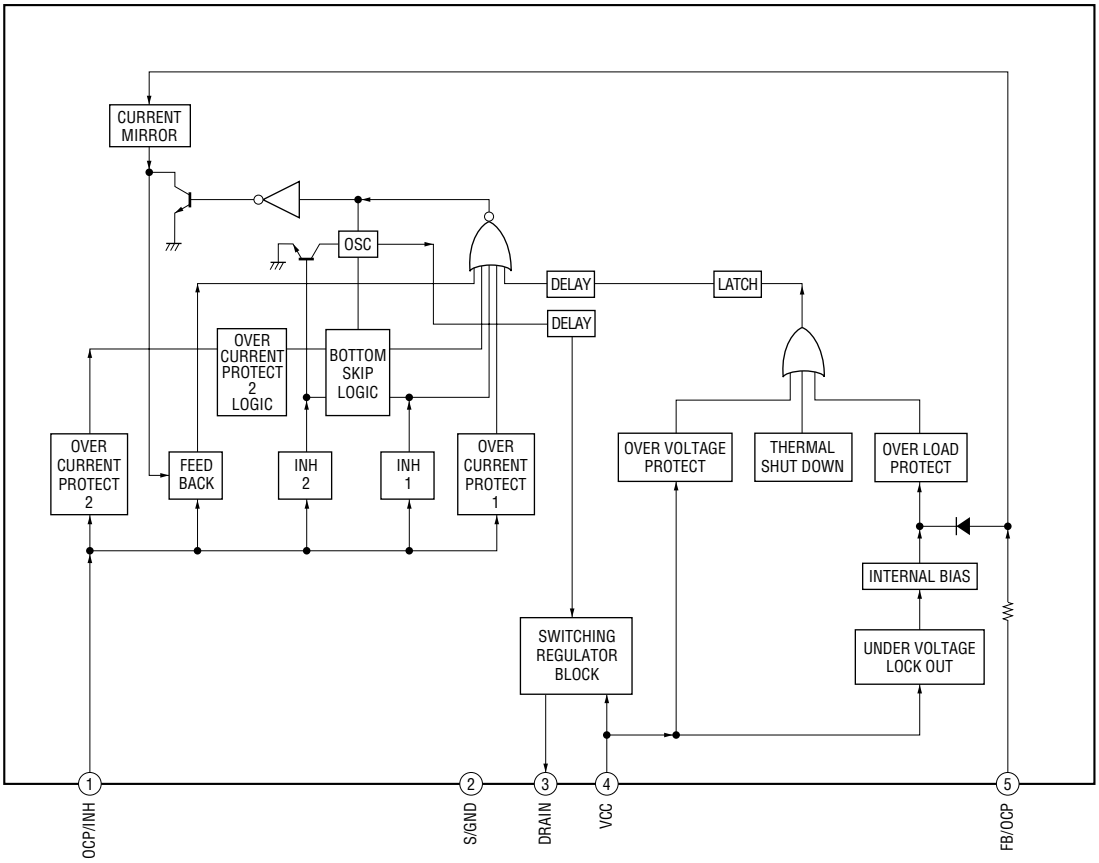

IC121 STR-V153

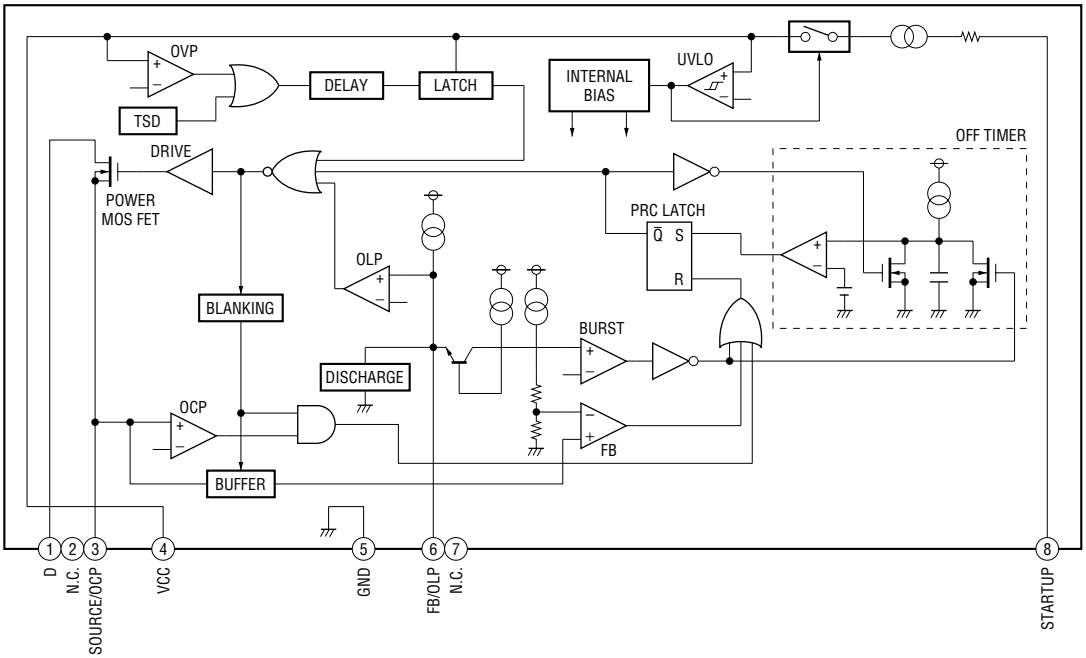

IC201 TK11118CSCL-G

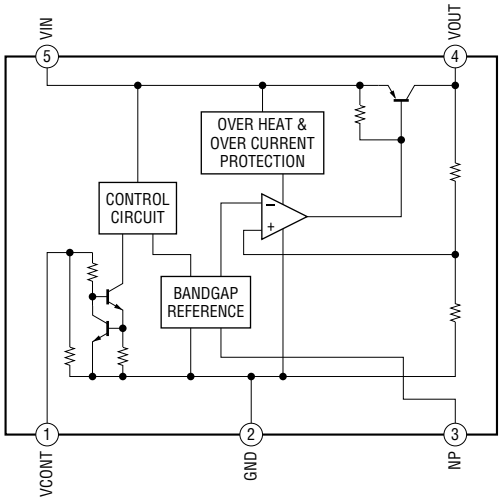

IC231 – 233 CXD9788AR

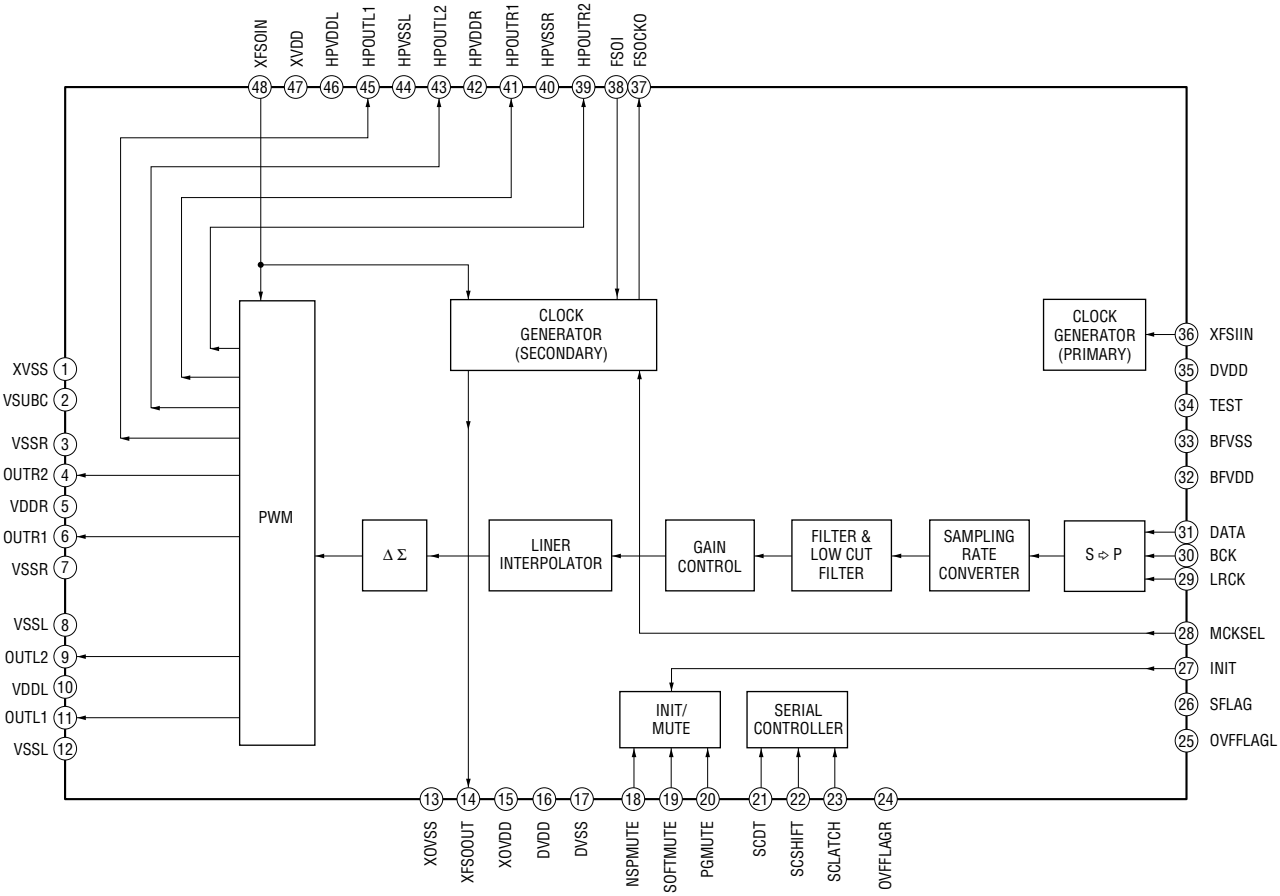

IC301 – 303 CXD9845M

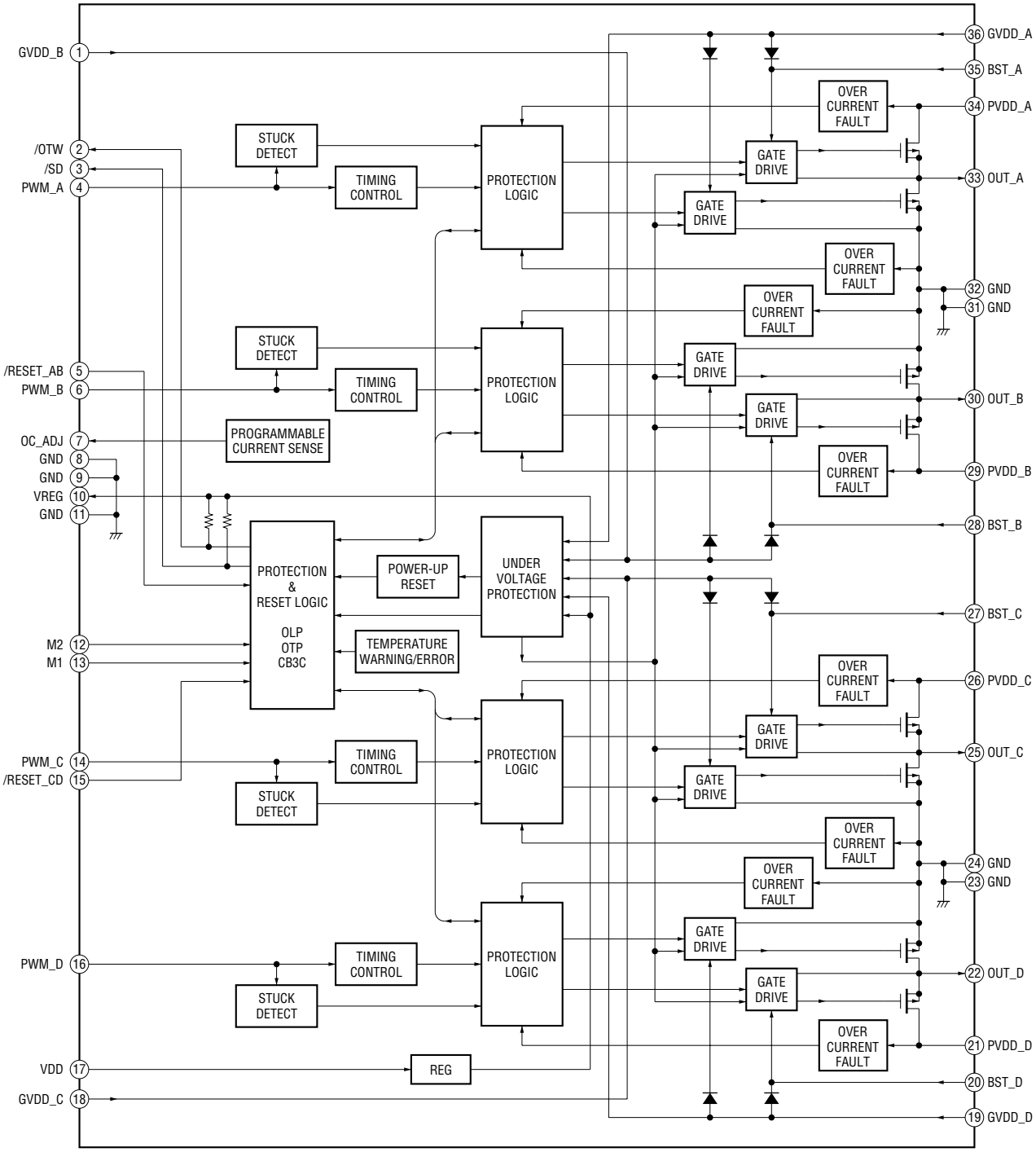

- **IC Pin Function Description**

DMB10 BOARD IC102 CXD9804R (RF AMP, SERVO DSP, MPEG DECODER)

Pin No.	Pin Name	I/O	Description
1	AGND	-	Ground terminal
2	DVDA	I	AC coupled input path A
3	DVDB	I	AC coupled input path B
4	DVDC	I	AC coupled input path C
5	DVDD	I	AC coupled input path D
6	DVDRFIP	I	AC coupled DVD RF signal input from the optical pick-up block
7	DVDRFIN	I	AC coupled DVD RF signal input terminal Not used
8	MA	I	DC coupled main-beam RF signal input A
9	MB	I	DC coupled main-beam RF signal input B
10	MC	I	DC coupled main-beam RF signal input C
11	MD	I	DC coupled main-beam RF signal input D
12	SA	I	DC coupled sub-beam RF signal input A Not used
13	SB	I	DC coupled sub-beam RF signal input B Not used
14	SC	I	DC coupled sub-beam RF signal input C Not used
15	SD	I	DC coupled sub-beam RF signal input D Not used
16	CDFON	I	CD focusing error negative input terminal Not used
17	CDFOP	I	CD focusing error positive input terminal Not used
18	TNI	I	3 beam satellite PD signal negative input from the optical pick-up block
19	TPI	I	3 beam satellite PD signal positive input from the optical pick-up block
20, 21	MDI1, MDI2	I	Laser power monitor input from the optical pick-up block
22	LDO2	O	Laser diode drive signal output to the optical pick-up block (for DVD)
23	LDO1	O	Laser diode drive signal output to the optical pick-up block (for CD)
24	SVDD3	-	Power supply terminal (+3.3V)
25	CSO	O	Central servo signal output terminal Not used
26	RFLVL	O	RFRP low pass output terminal Not used
27	SGND	-	Ground terminal
28	V2REFO	O	Reference voltage (+2.8V) output terminal
29	V2O	O	Reference voltage (+2V) output to the optical pick-up block
30	VREFO	O	Reference voltage (+1.4V) output terminal
31	FEO	O	Focus error monitor output terminal Not used
32	TEO	O	Tracking error monitor output terminal Not used
33	TEZISLV	O	Slice level of tracking error signal output terminal Not used
34	OPOUT	O	Output from the internal operational amplifier Not used
35, 36	OPIN	I	Input to the internal operational amplifier Not used
37	DMO	O	Spindle motor control signal output to the motor driver
38	FMO	O	Sled motor control signal output to the motor driver
39	TROPENPWM	O	Loading motor control signal output to the motor driver
40	IOPMON	I	Power monitor terminal
41	TRO	O	Tracking coil control signal output to the coil driver
42	FOO	O	Focus coil control signal output to the coil driver
43	USBVSS	-	Ground terminal
44	USBP	I/O	USB communication data input/output terminal Not used
45	USBM	I/O	USB communication data input/output terminal Not used
46	USBVDD3	-	Power supply terminal (+3.3V)
47	SPFG	I	Spindle motor hall sensor input from the motor driver
48 to 50	AN0 to AN2	I/O	Not used

Pin No.	Pin Name	I/O	Description
51	MAMUTE	O	Muting control signal output terminal Not used
52	DVDD18	-	Power supply terminal (+1.8V)
53 to 61	IOA2 to IOA8, IOA18, IOA19	O	Address signal output to the flash ROM
62	DVSS	-	Ground terminal
63	APLLCAP	-	Connection terminal for an external capacitor
64	APLLVSS	-	Ground terminal
65	VDD3	-	Power supply terminal (+3.3V)
66	IOWR	O	Write enable signal output to the flash ROM
67 to 72	IOA16 to IOA11	O	Address signal output to the flash ROM
73	DVDD3	-	Power supply terminal (+3.3V)
74 to 76	IOA10, IOA9, IOA20	O	Address signal output to the flash ROM
77	IOCS	O	Chip select signal output to the flash ROM
78	IOA1	O	Address signal output to the flash ROM
79	IOOE	O	Output enable signal output to the flash ROM
80	DVDD3	-	Power supply terminal (+3.3V)
81 to 84	AD0 to AD3	I/O	Data/address signal input/output terminal with the flash ROM
85	DVSS	-	Ground terminal
86 to 88	AD4 to AD6	I/O	Data/address signal input/output terminal with the flash ROM
89	IOA21	O	Address signal output to the flash ROM
90	ALE	O	Address latch enable signal output terminal Not used
91	AD7	I/O	Data/address signal input/output terminal with the flash ROM
92, 93	IOA17, IOA0	O	Address signal output to the flash ROM
94	DVSS	-	Ground terminal
95	UWR	O	Write enable signal output terminal Not used
96	URD	O	Data read enable signal output terminal Not used
97	DVDD18	-	Power supply terminal (+1.8V)
98	IFSDO	O	Serial data output to the system controller
99	IFCK	O	Serial data transfer clock signal output to the system controller
100	XIFCS	I	Chip select signal input from the system controller
101	IFSDI	I	Serial data input from the system controller
102	SCL	O	Serial data transfer clock signal output to the EEPROM and video encoder
103	SDA	I/O	Two-way data bus with the EEPROM and video encoder
104	TRG-SW	I	Trigger detection switch input terminal
105	IFBSY	I	Busy signal input from the system controller
106	RXD	I	Receive data input terminal for UART communication when data writing to flash memory
107	TXD	O	Transmit data output terminal for UART communication when data writing to flash memory
108	DVDD3	-	Power supply terminal (+3.3V)
109	ICE	I	ICE mode enable signal input terminal Not used
110	PRST	I	Reset signal input from the system controller "L": reset
111	IR	I	IR control signal input terminal Not used
112	INT0	O	Interrupt request signal output terminal Not used
113	DQM0	O	Data mask signal output to the SD-RAM
114	MREQ	O	Muting request signal output to the system controller
115	RD7	I/O	Two-way data bus with the SD-RAM
116	DVSS	-	Ground terminal
117, 118	RD6, RD5	I/O	Two-way data bus with the SD-RAM

Pin No.	Pin Name	I/O	Description
119	DVSS	-	Ground terminal
120, 121	RD4, RD3	I/O	Two-way data bus with the SD-RAM
122	DVDD18	-	Power supply terminal (+1.8V)
123 to 125	RD2 to RD0	I/O	Two-way data bus with the SD-RAM
126	RD15	I/O	Two-way data bus with the SD-RAM
127	DVDD3	-	Power supply terminal (+3.3V)
128 to 133	RD14 to RD9	I/O	Two-way data bus with the SD-RAM
134	DVSS	-	Ground terminal
135	RD8	I/O	Two-way data bus with the SD-RAM
136	GPIO	-	Not used
137	DQM1	O	Data mask signal output to the SD-RAM
138	RWE	O	Write enable signal output to the SD-RAM
139	CAS	O	Column address strobe signal output to the SD-RAM
140	RAS	O	Row address strobe signal output to the SD-RAM
141	DVDD3	-	Power supply terminal (+3.3V)
142	RCS	O	Chip select signal output to the SD-RAM
143	BA0	O	Bank address signal output to the SD-RAM
144	DVSS	-	Ground terminal
145	BA1	O	Bank address signal output to the SD-RAM
146, 147	RA10, RA0	O	Address signal output to the SD-RAM
148	DVSS	-	Ground terminal
149 to 151	RA1 to RA3	O	Address signal output to the SD-RAM
152	DVDD18	-	Power supply terminal (+1.8V)
153	RVREF	-	Not used
154	RCLKB	-	Not used
155	DVDD3	-	Power supply terminal (+3.3V)
156	RCLK	O	Serial data transfer clock signal output to the SD-RAM
157	CKE	O	Clock enable signal output to the SD-RAM
158 to 160	RA11, RA9, RA8	O	Address signal output to the SD-RAM
161	DVSS	-	Ground terminal
162	RA7	O	Address signal output to the SD-RAM
163	DVSS	-	Ground terminal
164 to 166	RA6 to RA4	O	Address signal output to the SD-RAM
167	DVDD3	-	Power supply terminal (+3.3V)
168	DISC/X	-	Not used
169	RGB	O	Video output (RGB) selection signal output terminal
170	XSMRST	O	System reset signal output to the HDMI controller "L": reset Used for the US and Canadian models
171	WIDE	O	Wide control signal output terminal
172	NT	-	Not used
173	DVDD18	-	Power supply terminal (+1.8V)
174	EUR	-	Not used
175	DVSS	-	Ground terminal
176	LIMSW	I	Limit detection switch input terminal
177	OCKSW	I	Disc slot in/out detection switch input terminal
178	VCLK	O	System clock output (27 MHz) to the progressive scan converter Used for the US and Canadian models
179	CKSW	I	Chucking detection switch input terminal

Pin No.	Pin Name	I/O	Description
180	IO3	-	Not used
181	TSDM	O	Thermal shut down signal output to the motor/coil driver
182	DVDD3	-	Power supply terminal (+3.3V)
183	MUTE	O	Muting signal output to the motor/coil driver
184	MUTE123	O	Muting signal output to the motor/coil driver
185	REV	O	Loading motor drive signal output to the motor driver (reverse direction)
186	FWD	O	Loading motor drive signal output to the motor driver (forward direction)
187	MSW	O	DVD/CD selection signal output terminal
188	DSEL	O	Interlace/progressive selection signal output to the video amplifier
189	DAVCC	-	Power supply terminal (+3.3V)
190	VREF	-	For bandgap reference voltage terminal
191	FS	-	Full scale adjustment terminal
192	YUV0	O	Video data output terminal Used for the US and Canadian models
193	DAVSS	-	Ground terminal
194	YUV1	O	Y signal output terminal
195	DAVDD	-	Power supply terminal (+3.3V)
196	YUV2	O	Chroma signal output terminal
197	DAVSS	-	Ground terminal
198	YUV3	O	Video signal output terminal
199	DAVDD	-	Power supply terminal (+3.3V)
200	YUV4	O	Chroma signal output terminal
201	DAVSS	-	Ground terminal
202, 203	YUV5, YUV6	O	Component video signal output terminal
204	DVDD3	-	Power supply terminal (+3.3V)
205	VSYNC	O	Vertical sync signal output terminal Used for the US and Canadian models
206	YUV7	O	Video data output terminal Used for the US and Canadian models
207	HSYNC	O	Horizontal sync signal output terminal Used for the US and Canadian models
208	SMSCK	O	Serial data transfer clock signal output to the HDMI controller Used for the US and Canadian models
209	SMSDI	I	Serial data input from the HDMI controller Used for the US and Canadian models
210	SMSDO	O	Serial data output to the HDMI controller Used for the US and Canadian models
211	XSMCS	O	Chip select signal output to the HDMI controller Used for the US and Canadian models
212	DVDD3	-	Power supply terminal (+3.3V)
213	ALRCK	O	L/R sampling clock signal output to the DSP and HDMI panellink cinema transmitter
214	ABCK	O	Bit clock signal output to the DSP and HDMI panellink cinema transmitter
215	ACLK	O	Master clock signal output to the DSP and HDMI panellink cinema transmitter
216	DVSS	-	Ground terminal
217 to 219	ASDATA0 to ASDATA2	O	Audio serial data output terminal
220	XRST	O	Reset signal output to the video encoder "L": reset
221	DVDD18	-	Power supply terminal (+1.8V)
222	ASDATA4	O	Audio serial data output terminal
223	DVSS	-	Ground terminal
224	DWIDE	-	Not used
225	SPDIF	O	SPDIF digital audio signal output terminal
226	RFGND18	-	Ground terminal
227	RFVDD18	-	Power supply terminal (+1.8V)
228	XTALO	O	System clock output terminal (27 MHz)

Pin No.	Pin Name	I/O	Description
229	XTALI	I	System clock input terminal (27 MHz)
230	JITFO	O	Output terminal of the RF jitter meter
231	JITFN	I	Input terminal of the RF jitter meter
232	PLLVSS	-	Ground terminal
233	IDAC	-	Not used
234	PLLVDD3	-	Power supply terminal (+3.3V)
235	LPFON	O	Data PLL loop filter output terminal
236	LPFIP	I	Data PLL loop filter input terminal
237	LPFIN	I	Data PLL loop filter input terminal
238	LPFOP	O	Data PLL loop filter output terminal
239	VDD3	-	Power supply terminal (+3.3V)
240	VCM	-	Not used
241	VSS	-	Ground terminal
242	VREFP	-	For reference voltage terminal
243	VREFN	-	For reference voltage terminal
244	RFVDD3	-	Power supply terminal (+3.3V)
245	RFRPDC	O	RF ripple detect output terminal
246	RFRPAC	I	RF ripple detect input terminal
247	HRFZC	I	High frequency RF ripple zero crossing terminal
248	CRTPLP	O	Defect level filter capacitor connecting terminal
249	RFGND	-	Ground terminal
250	CEQP	-	Not used
251	CEQN	-	Not used
252	OSP	O	RF offset cancellation capacitor connecting terminal
253	OSN	O	RF offset cancellation capacitor connecting terminal
254	RFGC	O	RF AGC loop capacitor connecting for DVD-ROM
255	IREF	I	Reference current input terminal
256	AVDD3	-	Power supply terminal (+3.3V)

MIB01 BOARD IC503 CXD9837R (PROGRESSIVE SCAN CONVERTER)

Pin No.	Pin Name	I/O	Description
1	OVDD	-	Power supply terminal (+3.3V) (for I/O)
2	CLK1	I	System clock input (27 MHz) from the servo DSP
3	TEST7	I	Terminal for test Fixed at "L" in this set
4	PLL EN	I	PLL enable signal input from the servo DSP
5, 6	PI0, PI1	-	Not used
7	PI2	I	Video data input from the servo DSP
8	PI3	I	Y signal input from the servo DSP
9	PI4	I	Chroma signal input from the servo DSP
10	PI5	I	Video signal input from the servo DSP
11	PI6	I	Chroma signal input from the servo DSP
12, 13	PI7, PI8	I	Component video signal input from the servo DSP
14	PI9	I	Video data input from the servo DSP
15	NHSI	I	Horizontal sync signal input from the servo DSP
16	NVSI	I	Vertical sync signal input from the servo DSP
17	OVSS	-	Ground terminal (for I/O)
18	THMD	I	Through mode setting terminal Fixed at "L" in this set
19	CVSS	-	Ground terminal (for core)
20	NVSO	O	Vertical sync signal output terminal Not used
21	NHSO	O	Horizontal sync signal output terminal Not used
22 to 25	PO9 to PO6	O	Video signal output to the video encoder and pixel resolution converter
26	OVDD	-	Power supply terminal (+3.3V) (for I/O)
27	OVSS	-	Ground terminal (for I/O)
28 to 31	PO5 to PO2	O	Video signal output to the video encoder and pixel resolution converter
32, 33	PO1, PO0	O	Video signal output to the pixel resolution converter
34	TEST0	I	Terminal for test Fixed at "L" in this set
35	OVSS	-	Ground terminal (for I/O)
36	OVDD	-	Power supply terminal (+3.3V) (for I/O)
37	CVDD	-	Power supply terminal (+2.5V) (for core)
38	TEST1	I	Terminal for test Fixed at "L" in this set
39	TEST2	I	Terminal for test Fixed at "L" in this set
40	CLKO	O	System clock output (27 MHz) to the video encoder and pixel resolution converter
41 to 45	YO9 to YO5	O	Video signal output to the video encoder and pixel resolution converter
46	OVDD	-	Power supply terminal (+3.3V) (for I/O)
47	OVSS	-	Ground terminal (for I/O)
48 to 52	YO4 to YO0	O	Video signal output to the video encoder and pixel resolution converter
53	OVDD	-	Power supply terminal (+3.3V) (for I/O)
54	CVSS	-	Ground terminal (for core)
55	OVSS	-	Ground terminal (for I/O)
56 to 60	CO0 to CO4	O	Video signal output to the video encoder and pixel resolution converter
61	OVDD	-	Power supply terminal (+3.3V) (for I/O)
62	OVSS	-	Ground terminal (for I/O)
63 to 67	CO5 to CO9	O	Video signal output to the video encoder and pixel resolution converter
68	FILM	O	Filim sequence detection flag output terminal Not used
69	RFFI	I	MPEG flag (repeat first field flag) input terminal Not used
70	OVSS	-	Ground terminal (for I/O)
71	CVDD	-	Power supply terminal (+2.5V) (for core)

Pin No.	Pin Name	I/O	Description
72	IVDD	-	Power supply terminal (+3.3V) (for I/O)
73	OVDD	-	Power supply terminal (+3.3V) (for I/O)
74 to 77	MD19 to MD16	I/O	Two-way data bus terminal Not used
78	OVDD	-	Power supply terminal (+3.3V) (for I/O)
79	OVSS	-	Ground terminal (for I/O)
80 to 83	MA3, MA4, MA2, MA5	O	Address signal output to the SD-RAM
84	OVDD	-	Power supply terminal (+3.3V) (for I/O)
85	OVSS	-	Ground terminal (for I/O)
86 to 89	MA1, MA6, MA0, MA7	O	Address signal output to the SD-RAM
90	OVSS	-	Ground terminal (for I/O)
91	IVSS	-	Ground terminal (for I/O)
92	CVSS	-	Ground terminal (for core)
93	OVDD	-	Power supply terminal (+3.3V) (for I/O)
94 to 97	MA10, MA8, MA11, MA9	O	Address signal output to the SD-RAM
98	OVDD	-	Power supply terminal (+3.3V) (for I/O)
99	OVSS	-	Ground terminal (for I/O)
100	RAS	O	Row address strobe signal output to the SD-RAM
101	DQM	O	Data mask signal output to the SD-RAM
102	CAS	O	Column address strobe signal output to the SD-RAM
103	MCLK	O	Serial data transfer clock signal output to the SD-RAM
104	WE	O	Write enable signal output to the SD-RAM
105	TEST3	I	Terminal for test Fixed at "L" in this set
106	TEST4	I	Terminal for test Fixed at "L" in this set
107	OVSS	-	Ground terminal (for I/O)
108	OVDD	-	Power supply terminal (+3.3V) (for I/O)
109	CVDD	-	Power supply terminal (+2.5V) (for core)
110 to 113	MD7, MD8, MD6, MD9	I/O	Two-way data bus with the SD-RAM
114	OVDD	-	Power supply terminal (+3.3V) (for I/O)
115	OVSS	-	Ground terminal (for I/O)
116 to 119	MD5, MD10, MD4, MD11	I/O	Two-way data bus with the SD-RAM
120	OVDD	-	Power supply terminal (+3.3V) (for I/O)
121	OVSS	-	Ground terminal (for I/O)
122 to 125	MD3, MD12, MD2, MD13	I/O	Two-way data bus with the SD-RAM
126	OVSS	-	Ground terminal (for I/O)
127	CVSS	-	Ground terminal (for core)
128	OVDD	-	Power supply terminal (+3.3V) (for I/O)
129 to 132	MD1, MD14, MD0, MD15	I/O	Two-way data bus with the SD-RAM
133	SLV	I	MPU interface slave address setting terminal Slave address setting: 0 x 72 when SLV is "0", 0 x 70 when SLV is "1"
134	RFFO	O	MPEG flag (repeat first field flag) outnput terminal Not used
135	SDA	I/O	Two-way data bus with the HDMI controller
136	SCL	I	Serial data transfer clock signal input from the HDMI controller

Pin No.	Pin Name	I/O	Description
137	SRN	I	System reset signal input from the HDMI controller "L": reset
138	OVSS	-	Ground terminal (for I/O)
139	CVDD	-	Power supply terminal (+2.5V) (for core)
140	PLL VDD	-	Power supply terminal (+2.5V) (for PLL)
141	VPDX	-	Not used
142	TEST6	I	Terminal for test Fixed at "L" in this set
143	OVSS	-	Ground terminal (for I/O)
144	IVDD	-	Power supply terminal (+3.3V) (for I/O)

MIB01 BOARD IC506 ADV7300AKST (VIDEO ENCODER)

Pin No.	Pin Name	I/O	Description
1	VDD_IO	-	Power supply terminal (+3.3V)
2 to 9	P_Y (0) to P_Y (7)	I	Video signal input from the progressive scan converter
10	VDD	-	Power supply terminal (+2.5V)
11	GND	-	Ground terminal
12, 13	P_Y (8), P_Y (9)	I	Video signal input from the progressive scan converter
14 to 18	P_C (0) to P_C (4)	I	Video signal input from the progressive scan converter
19	SPI_II2_EN	-	Not used
20	ALS8	-	Not used
21	SDA	I/O	Two-way data bus with the servo DSP
22	SCL	I	Serial data transfer clock signal input from the servo DSP
23	P_HSYNC	I	Horizontal sync signal input terminal Not used
24	P_VSYNC	I	Vertical sync signal input terminal Not used
25	P_BLANK	I	Blanking signal input terminal Not used
26 to 30	P_C (5) to P_C (9)	I	Video signal input from the progressive scan converter
31	RTC/SCRESET/TR	-	Not used
32	CLKIN	I	System clock input (27 MHz) from the progressive scan converter
33	RESET	I	System reset signal input from the servo DSP "L": reset
34	EXT_LF	I	Connected to the external loop filter
35	RSET2	I	Component video signal output level adjustment signal terminal
36	COMP2	-	Not used
37	CR/B	O	Video signal (red) output to the video amplifier
38	CB/R	O	Video signal (blue) output to the video amplifier
39	Y/G	O	Video signal (green) output to the video amplifier
40	GND	-	Ground terminal
41	VAA	-	Power supply terminal (+2.5V)
42	C	O	Chroma video signal output to the video amplifier
43	Y	O	Luma video signal output to the video amplifier
44	V	O	CVBS video signal output to the video amplifier
45	COMP1	-	Not used
46	VREF	-	Not used
47	RSET1	I	Composite video signal output level adjustment signal terminal
48	S_BLANK	I	Blanking signal input terminal Not used
49	S_VSYNC	I	Vertical sync signal input terminal Not used
50	S_HSYNC	I	Horizontal sync signal input terminal Not used
51, 52	S (0), S (1)	I	Video signal input terminal Not used
53 to 55	S (2) to S (4)	I	Video signal input from the progressive scan converter
56	VDD	-	Power supply terminal (+2.5V)
57	GND	-	Ground terminal
58 to 62	S (5) to S (9)	I	Video signal input from the progressive scan converter
63	CLKIN_2	I	System clock input (27 MHz) from the progressive scan converter
64	GND_IO	-	Ground terminal

MIB01 BOARD IC507 CXD9836R (PIXEL RESOLUTION CONVERTER)

Pin No.	Pin Name	I/O	Description
1	VSS	-	Ground terminal
2	XTCK1	I	Terminal for test Fixed at "L" in this set
3	XSM	I	Terminal for test Fixed at "H" in this set
4	XTST	I	Terminal for test Fixed at "H" in this set
5	MST	I	Terminal for test Fixed at "L" in this set
6	SMCK	I	Terminal for test Fixed at "H" in this set
7 to 9	DC9 to DC7	I	Video signal input from the progressive scan converter
10	VDDI	-	Power supply terminal (+2.5V) (for core)
11	VSS	-	Ground terminal
12 to 15	DC6 to DC3	I	Video signal input from the progressive scan converter
16	VDDE	-	Power supply terminal (+3.3V) (for I/O)
17 to 19	DC2 to DC0	I	Video signal input from the progressive scan converter
20	DY0	I	Video signal input from the progressive scan converter
21	VSS	-	Ground terminal
22 to 30	DY1 to DY9	I	Video signal input from the progressive scan converter
31	VSS	-	Ground terminal
32 to 39	DI0 to DI7	I	Video signal input from the progressive scan converter
40	VDDI	-	Power supply terminal (+2.5V) (for core)
41	VSS	-	Ground terminal
42, 43	DI8, DI9	I	Video signal input from the progressive scan converter
44	DH	I	Horizontal sync signal input terminal Not used
45	DV	I	Vertical sync signal input terminal Not used
46	VDDE	-	Power supply terminal (+3.3V) (for I/O)
47	F1	I	Field flag control signal input terminal Not used
48	ALSB	I	IIC slave address setting terminal Slave address setting: 0 x 28 when ALSB is "0", 0 x 2A when ALSB is "1"
49	SDA	I/O	Two-way data bus with the HDMI controller
50	SCL	I	Serial data transfer clock signal input from the HDMI controller
51	VSS	-	Ground terminal
52	NRST	I	System reset signal input from the HDMI controller "L": reset
53	TEST0	I	Terminal for test Fixed at "L" in this set
54	TEST1	I	Terminal for test Fixed at "L" in this set
55	TEST2	I	Terminal for test Fixed at "L" in this set
56	TEST3	I	Terminal for test Fixed at "L" in this set
57, 58	QB0, QB1	O	Video signal (blue) output terminal Not used
59	OVDDE1	-	Power supply terminal (+3.3V) (for I/O)
60	VDDI	-	Power supply terminal (+2.5V) (for core)
61	VSS	-	Ground terminal
62 to 69	QB2 to QB9	O	Video signal (blue) output to the HDMI panellink cinema transmitter
70	VDDI	-	Power supply terminal (+2.5V) (for core)
71	VSS	-	Ground terminal
72, 73	QG0, QG1	O	Video signal (green) output terminal Not used
74, 75	QG2, QG3	O	Video signal (green) output to the HDMI panellink cinema transmitter
76	VDDE	-	Power supply terminal (+3.3V) (for I/O)
77 to 80	OG4 to OG7	O	Video signal (green) output to the HDMI panellink cinema transmitter
81	VSS	-	Ground terminal

Pin No.	Pin Name	I/O	Description
82, 83	OG8, OG9	O	Video signal (green) output to the HDMI panellink cinema transmitter
84, 85	QR0, QR1	O	Video signal (red) output terminal Not used
86 to 90	OR2 to OR6	O	Video signal (red) output to the HDMI panellink cinema transmitter
91	VSS	-	Ground terminal
92	OVDDE2	-	Power supply terminal (+3.3V) (for I/O)
93 to 95	OR7 to OR9	O	Video signal (red) output to the HDMI panellink cinema transmitter
96	QV	O	Vertical sync signal output to the HDMI panellink cinema transmitter
97	QH	O	Horizontal sync signal output to the HDMI panellink cinema transmitter
98	QDE	O	Dsata enable signal output to the HDMI panellink cinema transmitter
99	QCLK	O	Pixel clock signal output to the HDMI panellink cinema transmitter
100	VDDI	-	Power supply terminal (+2.5V) (for core)
101	VSS	-	Ground terminal
102	EXCLK	I	Pixel clock signal input terminal for external PLL mode In internal PLL miode, must be fixed at "L" Fixed at "L" in this set
103	OVDDE3	-	Power supply terminal (+3.3V) (for I/O)
104	PH1	O	Phase comparate signal output terminal for external PLL (reference) In internal PLL miode, must be not connected not connect in this set
105	N.C.	-	Not used
106	AVS1	-	Ground terminal (for PLL)
107	AVD1	-	Power supply terminal (+3.3V) (for PLL)
108	CPO	O	Charge pump output terminal for internal PLL mode
109	N.C.	-	Not used
110	VCI	I	VCO input terminal for internal PLL mode
111	AVS2	-	Ground terminal (for PLL)
112	AVD2	-	Power supply terminal (+3.3V) (for PLL)
113	N.C.	-	Not used
114	PH2	O	Phase comparate signal output terminal for external PLL mode (feedback) In internal PLL miode, must be not connected not connect in this set
115	PLLEN	I	Selection terminal for internal PLL mode/external PLL mode "L": internal PLL mode, "H": external PLL mode Fixed at "H" in this set
116	OVDDE4	-	Power supply terminal (+3.3V) (for I/O)
117	DCLK	I	System clock input (27 MHz) from the progressive scan converter
118	OVSS1	-	Ground terminal
119	DCLKP	I	Setting terminal for DCLK polarity
120	VDDI	-	Power supply terminal (+2.5V) (for core)

MIB01 BOARD IC601 MB89538APFM-G-663-E1 (HDMI CONTROLLER)

Pin No.	Pin Name	I/O	Description
1, 2	P46, P47	-	Not used
3 to 10	AN0 to AN7	-	Not used
11	AVCC	-	Power supply terminal (+5.2V) (for internal A/D converer)
12	AVR	I	Reference voltage (+5.2V) input terminal (for internal A/D converer)
13	AVSS	-	Ground terminal (for internal A/D converer)
14	XSMCS	I	Chip select signal input from the servo DSP
15	INT11	-	Not used
16	XTXINT	I	Interrupt status input from the HDMI panellink cinema transmitter
17	INT13	-	Not used
18	P64	-	Not used
19	XRST	I	System reset signal input from the servo DSP "L": reset
20, 21	MOD0, MOD1	I	Setting terminal for memory access mode Fixed at "L" in this set
22	X0	I	System clock input terminal (8 MHz)
23	X1	O	System clock output terminal (8 MHz)
24	VSS	-	Ground terminal
25	P27	-	Not used
26	SDA1	I/O	Two-way data bus with the progressive scan converter and pixel resolution converter
27	SCL1	O	Serial data transfer clock signal output to the progressive scan converter and pixel resolution converter
28	P-CON	-	Not used
29, 30	P22, P23	-	Not used
31	SDA0	I/O	Two-way data bus with the HDMI panellink cinema transmitter
32	SCL0	O	Serial data transfer clock signal output to the HDMI panellink cinema transmitter
33, 34	N.C	-	Not used
35	XTXRST	O	System reset signal output to the HDMI panellink cinema transmitter "L": reset
36	XIPRST	O	System reset signal output to the progressive scan converter "L": reset
37	XSCRST	O	System reset signal output to the pixel resolution converter "L": reset
38, 39	N.C	-	Not used
40	DL-MODE	-	Not used
41 to 43	N.C	-	Not used
44, 45	TYPE0, TYPE1	-	Not used
46 to 49	N.C	-	Not used
50	SMSCK	-	Not used
51	SMSDI	I	Serial data transfer clock signal input from the servo DSP
52	SMSDO	O	Serial data output to the servo DSP
53	SI1	I	Serial data input from the servo DSP
54	PTO2	-	Not used
55	PWC	-	Not used
56	VCC	-	Power supply terminal (+5.2V)
57	WTO	-	Not used
58	PTO1	-	Not used
59	EC	-	Not used
60	SCK2	-	Not used
61	SDA	I/O	Two-way data bus terminal for the HDMI OUT jack
62	SCL	O	Serial data transfer clock signal output terminal for the HDMI OUT jack
63	UCK2	-	Not used
64	UD2	-	Not used

MAIN BOARD IC501 M30622MGP-A20FPU0 (SYSTEM CONTROLLER)

Pin No.	Pin Name	I/O	Description
1	DAMP SCDT	O	Serial data output to the stream processor
2	DAMP SHIFT	O	Shift clock signal output to the stream processor
3	V-CONTROL	-	Not used
4	SIRCS_IN	I	Remote control signal input terminal
5	COM_DATA	O	Serial data output to the digital audio interface receiver and DSP
6	DSP_DOUT	I	Serial data input from the DSP
7	COM_CLK	O	Serial data transfer clock signal output to the digital audio interface receiver and DSP
8	BYTE	-	Not used
9	CNVSS	-	Not used
10, 11	-	-	Not used
12	RESET	I	System reset signal input terminal "L": reset For several hundreds msec. after the power supply rises, "L" is input, then it change to "H"
13	XOUT	O	Main system clock output terminal (5 MHz)
14	VSS	-	Ground terminal
15	XIN	I	Main system clock input terminal (5 MHz)
16	VCC	-	Power supply terminal (+3.3V)
17	NMI	-	Not used
18	DIR ZERO	I	Audio serial data input from the digital audio interface receiver
19	DIR_CSFLAG	I	CSFRAG data input from the digital audio interface receiver
20	AC_CUT	I	AC cut detection signal input terminal "L": AC cut
21	-	-	Not used
22, 23	LED0, LED1	O	LED drive signal output terminal "H": LED on
24	FL_CLK	O	Serial data transfer clock signal output to the FL driver
25	MAMUTE	I	Muting request signal input from the servo DSP
26	STBY_LED	O	LED drive signal output of the STANDBY indicator "H": LED on
27	FL_D_OUT	O	Serial data output to the FL driver
28	FL_CS	O	Chip select signal output to the FL driver
29	I2C_CLK	-	Not used
30	I2C_DATA	-	Not used
31	DVD SID	O	Serial data output to the servo DSP
32	DVD SOD	I	Serial data input from the servo DSP
33	DVD SCO	I	Serial data transfer clock signal input from the servo DSP
34	DVD XIFBUSY	I	Busy signal input from the servo DSP
35 to 37	-	-	Not used
38	SEL1FS	O	Data select signal output terminal
39	DVD XIFCS	O	Chip select signal output to the servo DSP
40	P_CONT1	O	Power on/off control signal output to the regulator IC
41	FL_RESET	O	System reset signal output to the FL driver "L": reset
42	OCSW	I	Disc slot in/out detection switch input terminal
43	MTK XRST	O	System reset signal output to the servo DSP "L": reset
44	P_CONT2	O	Power on/off control signal output to the regulator IC and power supply circuit
45	DEVICE	I	Fixed at "H" in this set (TI)
46	CE	-	Not used
47	DRIVE_RST	O	Reset signal output to the power driver "L": reset
48	DRIVE_OCP	I	Shut down state input from the power driver "L": shut down

Pin No.	Pin Name	I/O	Description
49	OVERFLOW1	I	Over flow status 1 input stream processor
50	OVERFLOW2	I	Over flow status 2 input stream processor
51 to 53	DAMP LATCH1 to DAMP LATCH3	O	Latch control signal output to the stream processor
54	DAMP INIT	O	Reset signal output to the stream processor "L": reset
55	DAMP SOFT MUTE	O	Soft muting on/off control signal output to the stream processor "L": muting on
56, 57	-	-	Not used
58	DSP_ACK	I	Acknowledge signal input from the DSP
59	DSP_GP9	I	Read ready signal input from the DSP
60	DSP_XRST	O	System reset signal output to the DSP "L": reset
61	DSP_HCE	O	Chip select signal output to the DSP
62	VCC	-	Power supply terminal (+3.3V)
63	DSP_BST	O	Boot strap signal output to the DSP
64	VSS	-	Ground terminal
65	DSP_PM	O	PLL initialize signal output to the DSP
66	DIR RST	O	System reset signal output to the digital audio interface receiver
67	DIR HCE	O	Chip enable signal output to the digital audio interface receiver
68	DIR RERR	I	PLL lock error signal and data error flag input from the digital audio interface receiver
69	DIR XSTATE	I	Source clock selection monitor input from the digital audio interface receiver
70	DTR HDOUT	I	Read data input from the digital audio interface receiver
71	DSP_SKIP	O	Write signal output to the DSP
72	AD_RST	O	System reset signal output to the A/D converter
73	ATT	O	Muting on/off control signal output terminal
74	KEY INT	I	Wake up signal input terminal by front panel key pressing
75	RDS-CLK	I	RDS serial data transfer clock signal input from the tuner unit Used for the AEP, UK and Russian models
76	RDS-DATA	I	RDS serial data input from the tuner unit Used for the AEP, UK and Russian models
77	PLL-CLK	O	PLL serial data transfer clock signal output to the tuner unit
78	PLL-DO	O	PLL serial data output to the tuner unit
79	PLL-CE	O	PLL serial chip enable signal output to the tuner unit
80	PLL-DI	I	PLL serial data input from the tuner unit
81, 82	AV SELECT 0, AV SELECT 1	O	Audio/video input selection signal output terminal
83, 84	AV SELECT 2, AV SELECT 3	O	Video muting signal output terminal
85	TUNED	I	Tuning detection signal input from the tuner unit "L": tuned
86 to 91	-	-	Not used
92	DESTINATION	I	Setting terminal for the destination
93	MODEL	I	Setting terminal for the model
94, 95	KEY2, KEY1	I	Front panel key input terminal (A/D input)
96	VSS	-	Ground terminal
97	KEY0	I	Front panel key input terminal (A/D input)
98	VREF	I	Reference voltage (+3.5V) input terminal
99	VCC	-	Power supply terminal (+3.3V)
100	-	-	Not used

MAIN BOARD IC506 CXD9862R (DSP)

Pin No.	Pin Name	I/O	Description
1	VSS	-	Ground terminal
2	XRST	I	System reset signal input from the system controller "L": reset
3	EXTIN	I	Master clock signal input terminal Not used
4	LRCKI3	I	L/R sampling clock signal (44.1 kHz) input terminal Not used
5	VDDI	-	Power supply terminal (+1.8V)
6	BCKI3	I	Bit clock signal (2.8224 MHz) input terminal Not used
7	PLOCK	O	PLL lock signal output terminal Not used
8	VSS	-	Ground terminal
9	MCLK1	I	System clock input terminal (13.9 MHz)
10	VDDI	-	Power supply terminal (+1.8V)
11	VSS	-	Ground terminal
12	MCLK2	O	System clock output terminal (13.9 MHz)
13	MS	I	Master/slave setting terminal "L": internal clock, "H": external clock Fixed at "L" in this set
14	SCKOUT	O	Master clock signal output to the stream processor
15	LRCKI1	I	L/R sampling clock signal (44.1 kHz) input from the digital audio interface receiver or servo DSP
16	VDDE	-	Power supply terminal (+3.3V)
17	BCKI1	I	Bit clock signal (2.8224 MHz) input from the digital audio interface receiver or servo DSP
18	SDI1	I	Audio serial data input from the digital audio interface receiver
19	LRCKO	O	L/R sampling clock signal (44.1 kHz) output to the stream processor
20	BCKO	O	Bit clock signal (2.8224 MHz) output to the stream processor
21	VSS	-	Ground terminal
22	KFSIO	I	Audio clock signal input from the digital audio interface receiver or servo DSP
23 to 25	SDO1 to SDO3	O	Audio serial data output to the stream processor
26	SDO4	O	Audio serial data output terminal Not used
27	SPDIF	O	SPDIF signal output terminal Not used
28	LRCKI2	I	L/R sampling clock signal (44.1 kHz) input from the digital audio interface receiver or servo DSP
29	BCKI2	I	Bit clock signal (2.8224 MHz) input from the digital audio interface receiver or servo DSP
30	SDI2	I	Audio serial data input from the A/D converter or servo DSP
31	VSS	-	Ground terminal
32	HACN	O	Acknowledge signal output to the system controller
33	HDIN	I	Serial data input from the system controller
34	HCLK	I	Serial data transfer clock signal input from the system controller
35	HDOUT	O	Serial data output to the system controller
36	HCS	I	Chip select input from the system controller
37	GP12	I	Write signal input from the system controller
38	GP13	O	SD-RAM chip enable output terminal Not used
39	GP14	O	Row address strobe signal output terminal Not used
40	VDDI	-	Power supply terminal (+1.8V)
41	VSS	-	Ground terminal
42	GP15	O	Column address strobe signal output terminal Not used
43	OE0	O	Output terminal of data input/output mask Not used
44	CS0	O	Chip select signal output to the S-RAM
45	SW0	O	Write enable signal output to the S-RAM
46	VDDE	-	Power supply terminal (+3.3V)
47	WMD1	I	External memory wait mode setting terminal Fixed at "H" in this set

Pin No.	Pin Name	I/O	Description
48	VSS	-	Ground terminal
49	WMD0	I	External memory wait mode setting terminal Fixed at "H" in this set
50	PAGE2	O	External memory page selection signal output terminal Not used
51	VSS	-	Ground terminal
52, 53	PAGE1, PAGE0	O	External memory page selection signal output terminal Not used
54	BOOT	I	Boot mode control signal input terminal Not used
55	TST1	O	Output terminal for the test Not used
56	BST	I	Boot strap signal input terminal
57	MOD1	I	Operation mode setting terminal "L": enhanced mode, "H": normal mode Fixed at "H" in this set
58	MOD0	I	Operation mode setting terminal "L": single chip mode, "H": can not use Fixed at "L" in this set
59	EXLOCK	I	PLL lock error signal and data error flag input from the digital audio interface receiver
60	VDDI	-	Power supply terminal (+1.8V)
61	VSS	-	Ground terminal
62, 63	A17, A16	O	Address signal output terminal Not used
64 to 66	A15 to A13	O	Address signal output to the S-RAM
67	GP10	O	Not used
68	GP9	O	Read ready signal output to the system controller
69	GP8	I	PCM audio data input from the digital audio interface receiver
70	VDDI	-	Power supply terminal (+1.8V)
71	VSS	-	Ground terminal
72 to 75	D15 to D12	I/O	Two-way data bus with the S-RAM
76	VDDE	-	Power supply terminal (+3.3V)
77 to 80	D11 to D8	I/O	Two-way data bus with the S-RAM
81	VSS	-	Ground terminal
82 to 85	A9, A12 to A10	O	Address signal output to the S-RAM
86	TDO	O	Simplicity emulation data output terminal Not used
87	TMS	I	Simplicity emulation data input start and end terminal Not used
88	XTRST	I	Simplicity emulation non-sync break signal input terminal Not used
89	TCK	I	Simplicity emulation clock signal input terminal Not used
90	TDI	I	Simplicity emulation data input terminal Not used
91	VSS	-	Ground terminal
92 to 97	A8 to A3	O	Address signal output to the S-RAM
98, 99	D7, D6	I/O	Two-way data bus with the S-RAM
100	VDDI	-	Power supply terminal (+1.8V)
101	VSS	-	Ground terminal
102 to 105	D5 to D2	I/O	Two-way data bus with the S-RAM
106	VDDE	-	Power supply terminal (+3.3V)
107, 108	D1, D0	I/O	Two-way data bus with the S-RAM
109, 110	A2, A1	O	Address signal output to the S-RAM
111	VSS	-	Ground terminal
112	A0	O	Address signal output to the S-RAM
113	PM	I	PLL initialize signal input from the system controller
114, 115	SDI3, SDI4	I	Audio serial data input from the servo DSP
116	SYNC	I	Sync/non-sync setting terminal "L": sync, "H": non-sync Fixed at "H" in this set

Pin No.	Pin Name	I/O	Description
117	TST2	O	Output terminal for the test Not used
118	GP11	-	Not used
119	TST3	O	Output terminal for the test Not used
120	VDDI	-	Power supply terminal (+1.8V)

SECTION 7
EXPLODED VIEWS

NOTE:

- -XX and -X mean standardized parts, so they may have some difference from the original one.
- Color Indication of Appearance Parts
  Example:
  KNOB, BALANCE (WHITE) . . . (RED)
  ↑ Parts Color ↑ Cabinet's Color
- Abbreviation
  CND : Canadian model
  RU : Russian model
  SP : Singapore model
- Items marked "*" are not stocked since they are seldom required for routine service. Some delay should be anticipated when ordering these items.
- The mechanical parts with no reference number in the exploded views are not supplied.
- Accessories are given in the last of the electrical parts list.

The components identified by mark ⚠ or dotted line with mark ⚠ are critical for safety.
Replace only with part number specified.

Les composants identifiés par une marque ⚠ sont critiquens pour la sécurité.
Ne les remplacer que par une pièce portant le numéro spécifié.

7-1. CASE (AL), SIDE PANEL SECTION

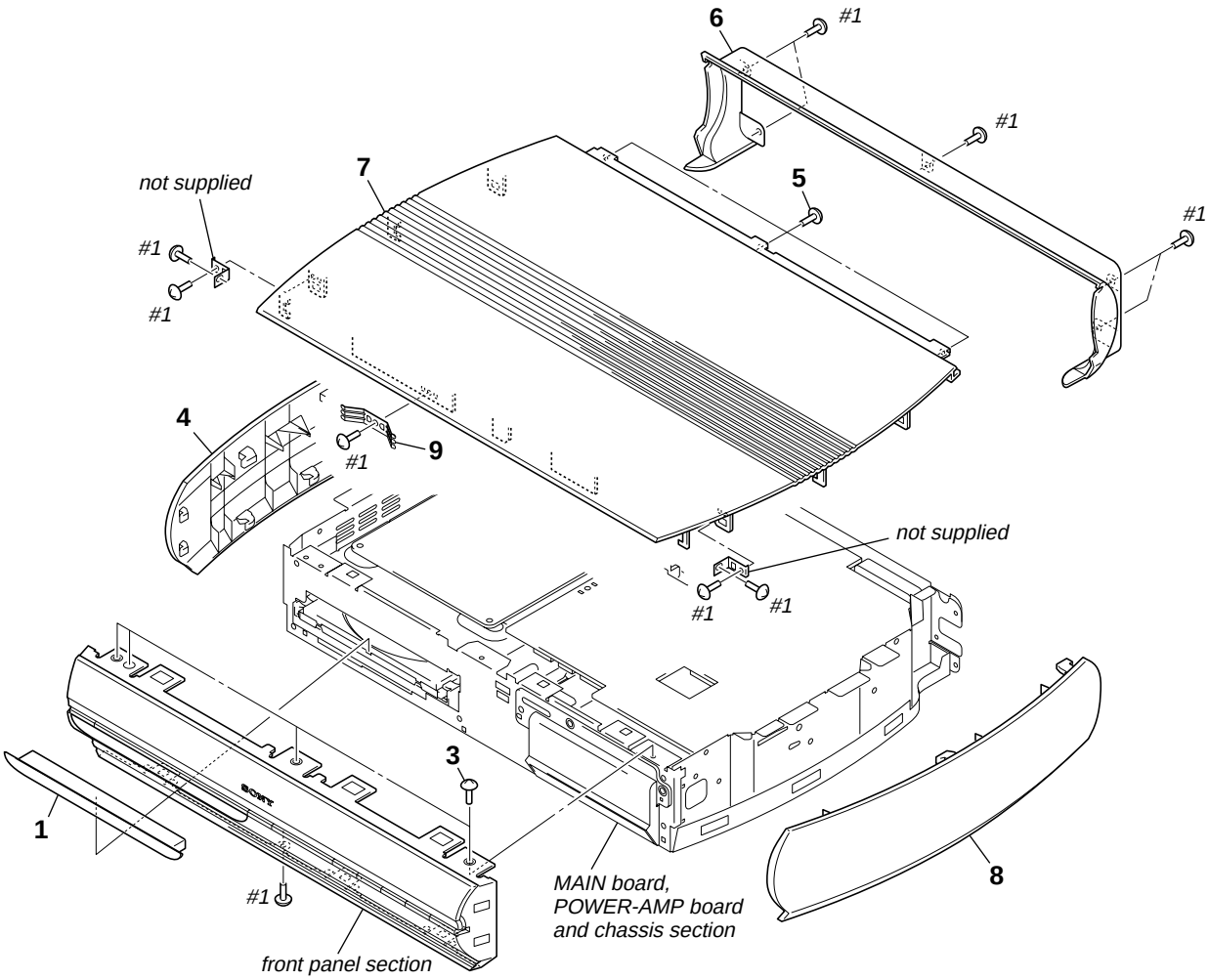

Note: When remove the loading assy panel (Ref. No. 1), make sure to refor to the DISASSEMBLY "3-5. FRONT PANEL SECTION" (page 14).

Ref. No.	Part No.	Description	Remark
1	X-2055-333-2	PANEL, LOADING ASSY	
3	2-436-530-01	SCREW +P TP 3X8 BT	
4	2-588-803-01	PANEL (L), SIDE	
5	3-704-515-22	SCREW (BV/RING)	
6	2-588-805-01	COVER (REAR)	
7	2-588-833-01	CASE (AL) (US, CND, RU)	
7	2-588-833-11	CASE (AL) (AEP, UK)	
7	2-588-833-21	CASE (AL) (SP)	
8	2-588-804-01	PANEL (R), SIDE	
9	2-588-844-01	PLATE (ALMI), GROUND	
#1	7-685-646-79	SCREW +BVTP 3X8 TYPE2 IT-3	

7-2. FRONT PANEL SECTION

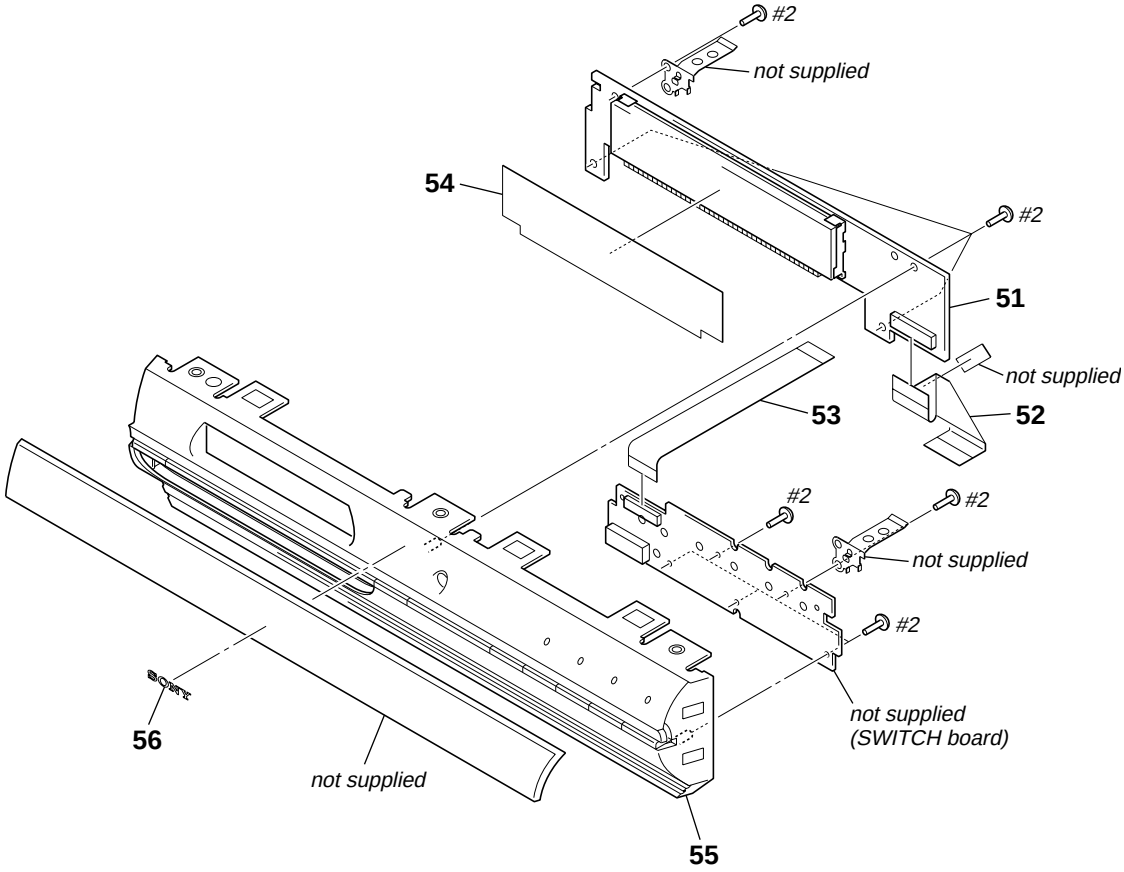

Note: If the wire (flat type) was replaced, fold it same as the wire (flat type) before replacement.

Ref. No.	Part No.	Description	Remark
51	A-1107-213-A	FL BOARD, COMPLETE	
52	1-828-980-11	WIRE (FLAT TYPE) (15 CORE)	
53	1-828-338-11	WIRE (FLAT TYPE) (17 CORE)	
54	2-588-799-01	FILTER (FL)	
55	X-2055-056-1	PANEL, ASSY FRONT	
56	4-942-567-01	EMBLEM (No. 4), SONY	
#2	7-685-533-19	SCREW +BTP 2.6X6 TYPE2 N-S	

7-3. MAIN BOARD SECTION

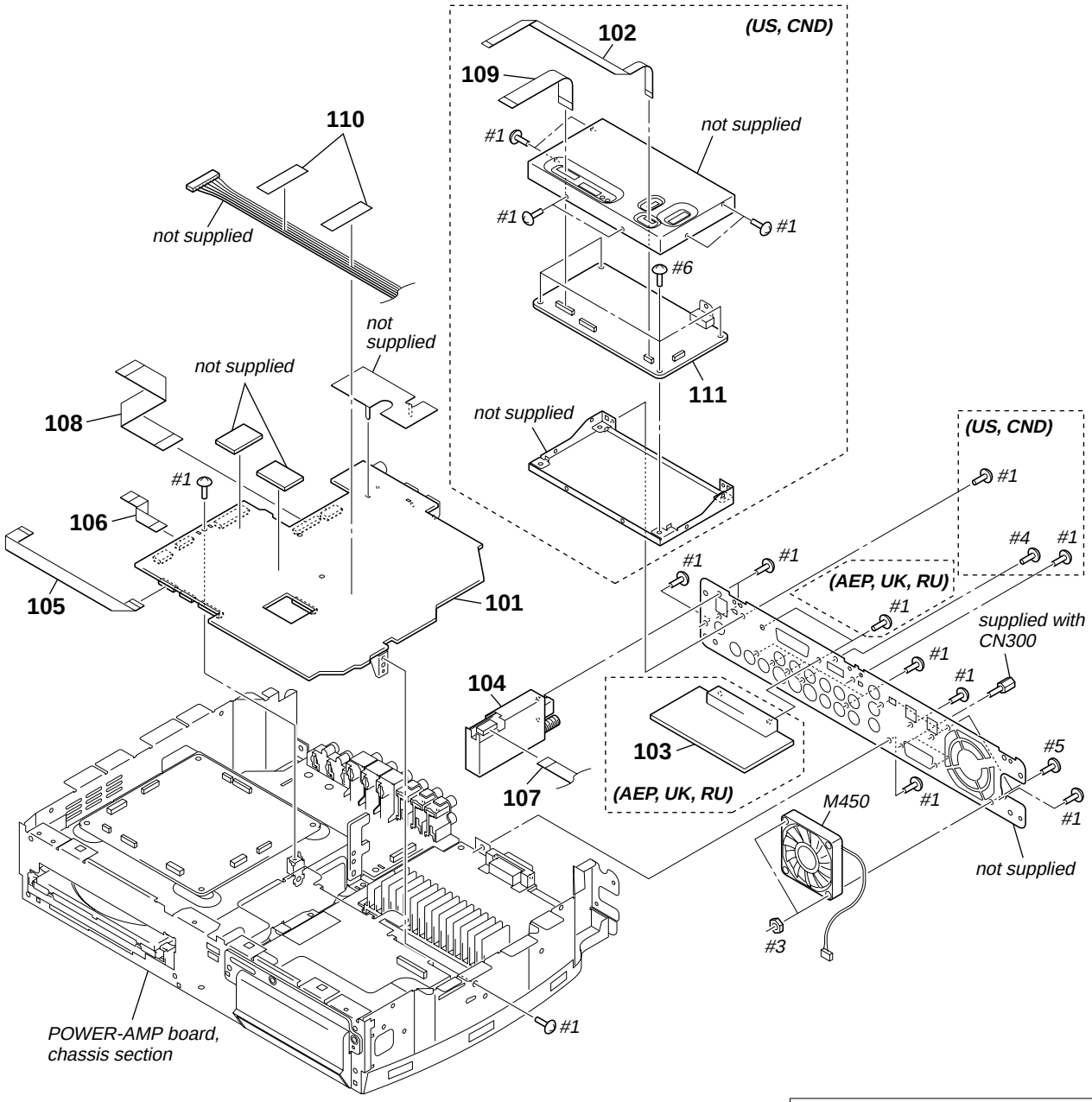

Note: If the wire (flat type) was replaced, fold it same as the wire (flat type) before replacement.

Ref. No.	Part No.	Description	Remark
101	A-1107-205-A	MAIN BOARD, COMPLETE (US, CND)	
101	A-1107-206-A	MAIN BOARD, COMPLETE (AEP, UK)	
101	A-1107-207-A	MAIN BOARD, COMPLETE (RU)	
101	A-1108-015-A	MAIN BOARD, COMPLETE (SP)	
102	1-828-190-51	WIRE (FLAT TYPE) (12 CORE) (US, CND)	
103	A-1124-330-A	SCART BOARD, COMPLETE (AEP, UK, RU)	
104	1-693-669-11	TUNER UNIT (TM-10CE) (AEP, UK, RU)	
104	1-693-671-11	TUNER UNIT (TM-10E) (SP)	
104	1-693-672-11	TUNER UNIT (TM-10U) (US, CND)	
105	1-828-320-11	WIRE (FLAT TYPE) (11 CORE)	
106	1-828-316-11	WIRE (FLAT TYPE) (11 CORE)	
107	1-827-731-11	WIRE (FLAT TYPE) (11 CORE) (AEP, UK, RU)	
107	1-828-957-11	WIRE (FLAT TYPE) (9 CORE) (US, CND, SP)	
108	1-828-359-11	WIRE (FLAT TYPE) (19 CORE)	
109	1-828-266-51	WIRE (FLAT TYPE) (28 CORE) (US, CND)	
110	3-378-109-12	CUSHION, SARANET	
◊ 111	A-1124-106-A	MIB01 BOARD, COMPLETE (for SERVICE)	(US, CND)
M450	1-787-331-11	FAN, D.C.	
#1	7-685-646-79	SCREW +BVTP 3X8 TYPE2 IT-3	
#3	7-684-023-04	N 3, TYPE 2	
#4	7-685-871-01	SCREW +BVTT 3X6 (S)	
#5	7-682-151-01	SCREW +P 3X14	
#6	7-685-645-79	SCREW +BVTP 3X6 TYPE2 N-S	

◊ Please refer to "NOTE OF HANDLING THE MIB01 BOARD (Part No. A-1124-106-A)" on the service note (Page 6) for handling of this board.

7-4. POWER-AMP BOARD SECTION

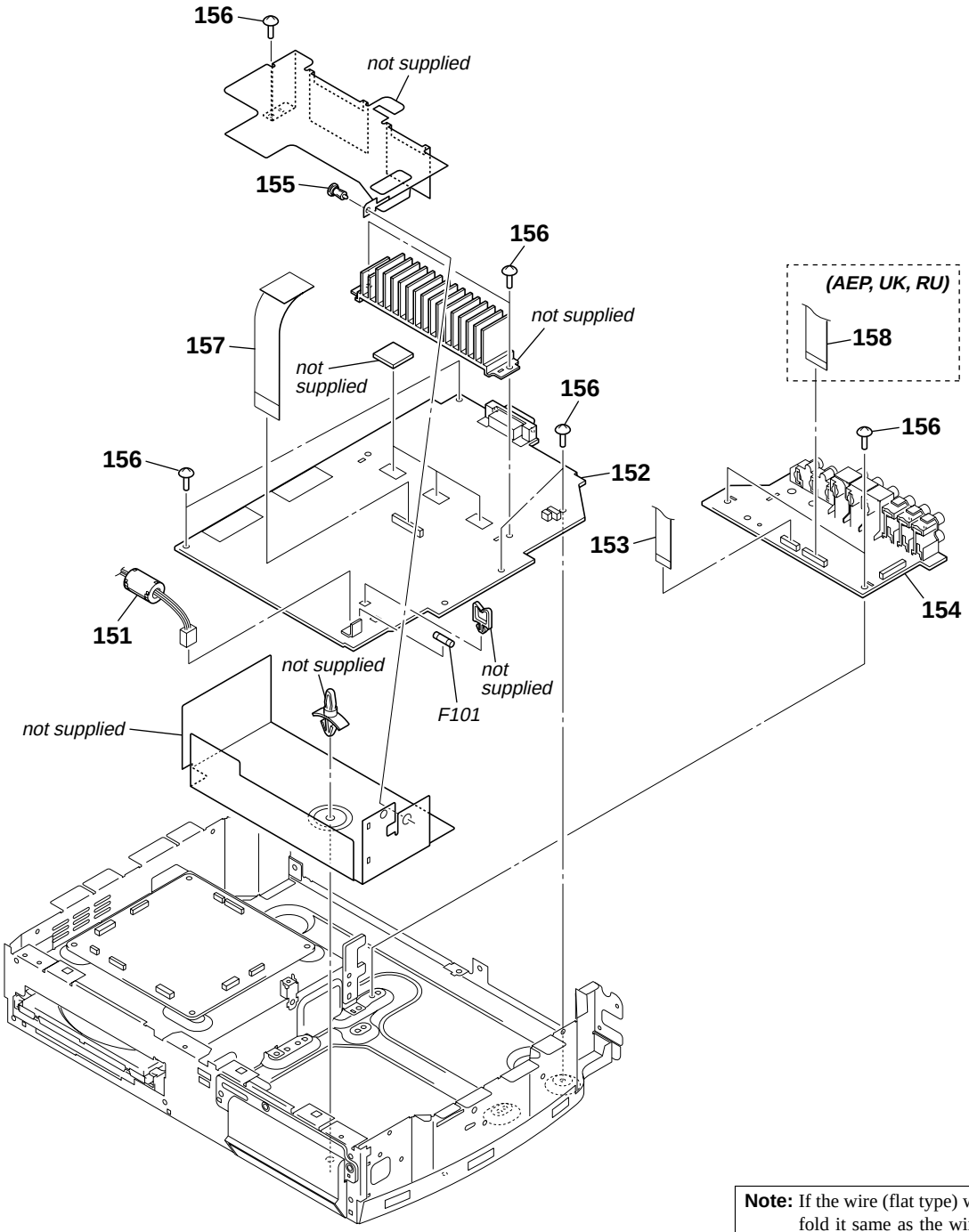

Note: If the wire (flat type) was replaced, fold it same as the wire (flat type) before replacement.

Ref. No.	Part No.	Description	Remark
151	1-500-459-11	FILTER, CLAMP (FERRITE CORE)	
152	A-1107-229-A	POWER-AMP BOARD, COMPLETE (US, CND)	
152	A-1107-230-A	POWER-AMP BOARD, COMPLETE	(AEP, UK, RU, SP)
153	1-828-327-11	WIRE (FLAT TYPE) (13 CORE) (US, CND)	
153	1-828-329-11	WIRE (FLAT TYPE) (13 CORE)	(AEP, UK, RU, SP)
154	A-1107-219-A	IO BOARD, COMPLETE (US, CND)	
154	A-1107-220-A	IO BOARD, COMPLETE (AEP, UK, RU)	
154	A-1108-020-A	IO BOARD, COMPLETE (SP)	
155	4-812-134-00	RIVET (DIA. 3.5), NYLON	
156	3-077-331-01	+BV3 (3-CR)	
157	1-828-367-11	WIRE (FLAT TYPE) (21 CORE)	
158	1-828-990-11	WIRE (FLAT TYPE) (17 CORE) (AEP, UK, RU)	
⚠F101	1-533-454-12	FUSE, GLASS TUBE (DIA. 5) (6.3A/125V)	(US, CND)
⚠F101	1-533-473-12	FUSE, GLASS TUBE (DIA. 5) (T6.3AL 250V)	(AEP, UK, RU, SP)

7-5. CHASSIS SECTION

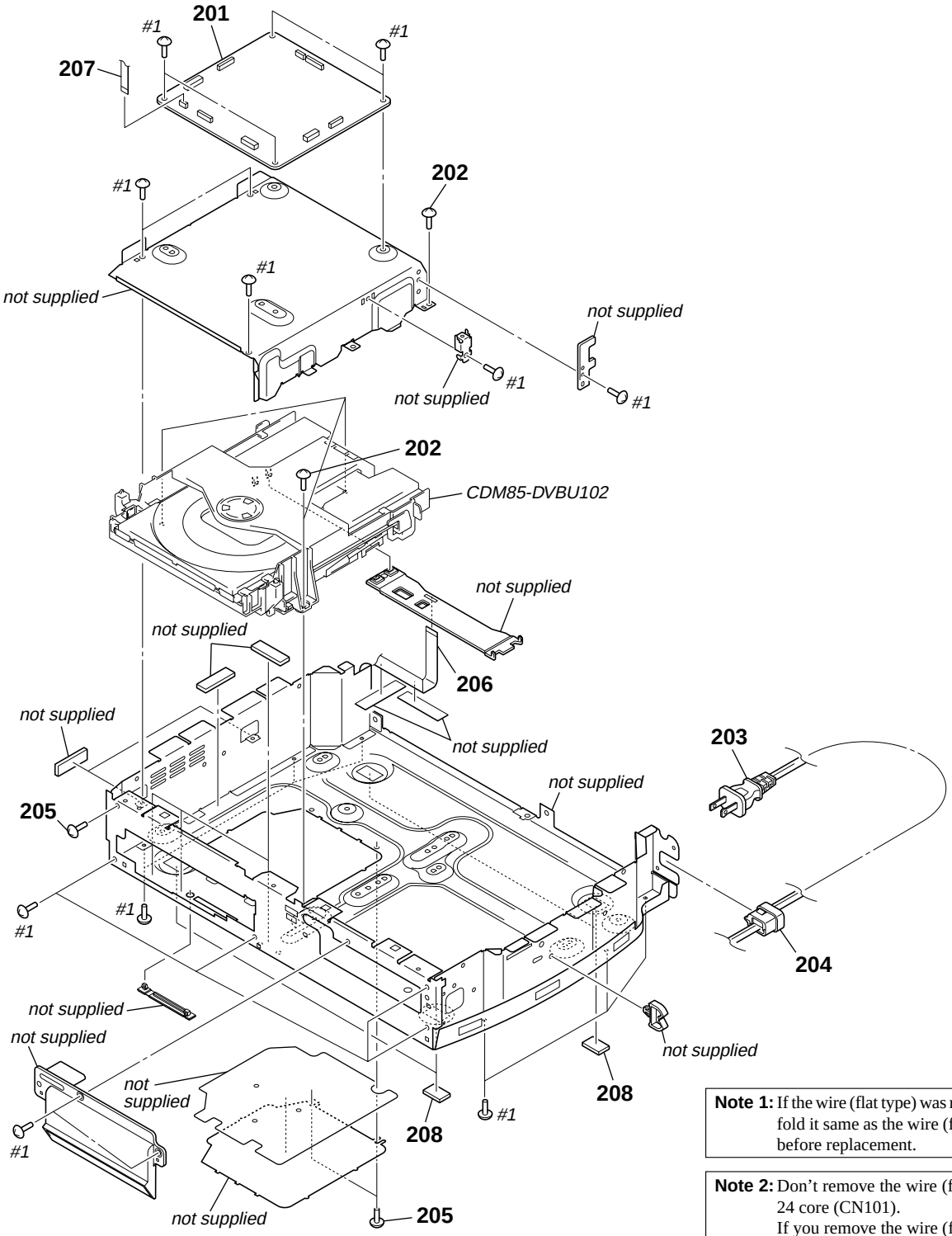

Note 1: If the wire (flat type) was replaced, fold it same as the wire (flat type) before replacement.

Note 2: Don't remove the wire (flat type) 24 core (CN101).
If you remove the wire (flat type) 24 core (CN101), solder the bridge of optical pick-up.

Ref. No.	Part No.	Description	Remark
201	A-1107-247-A	DMB10 BOARD, COMPLETE (US, CND)	
201	A-1107-248-A	DMB10 BOARD, COMPLETE (AEP, UK, RU)	
201	A-1113-204-A	DMB10 BOARD, COMPLETE (SP)	
202	3-077-331-01	+BV3 (3-CR)	
⚠203	1-777-071-23	CORD, POWER (AEP, UK, SP, RU)	
⚠203	1-783-820-11	CORD, POWER (US, CND)	

Ref. No.	Part No.	Description	Remark
* 204	3-703-244-00	BUSHING (2104), CORD	
205	2-436-530-01	SCREW +P TP 3X8 BT	
206	1-828-252-51	WIRE (FLAT TYPE) (24 CORE)	
207	1-828-292-11	WIRE (FLAT TYPE) (5 CORE)	
208	4-225-252-01	CUSHION (FOOT)	
#1	7-685-646-79	SCREW +BVTP 3X8 TYPE2 IT-3	

7-6. DVD MECHANISM DECK SECTION (CDM85-DVBU102)

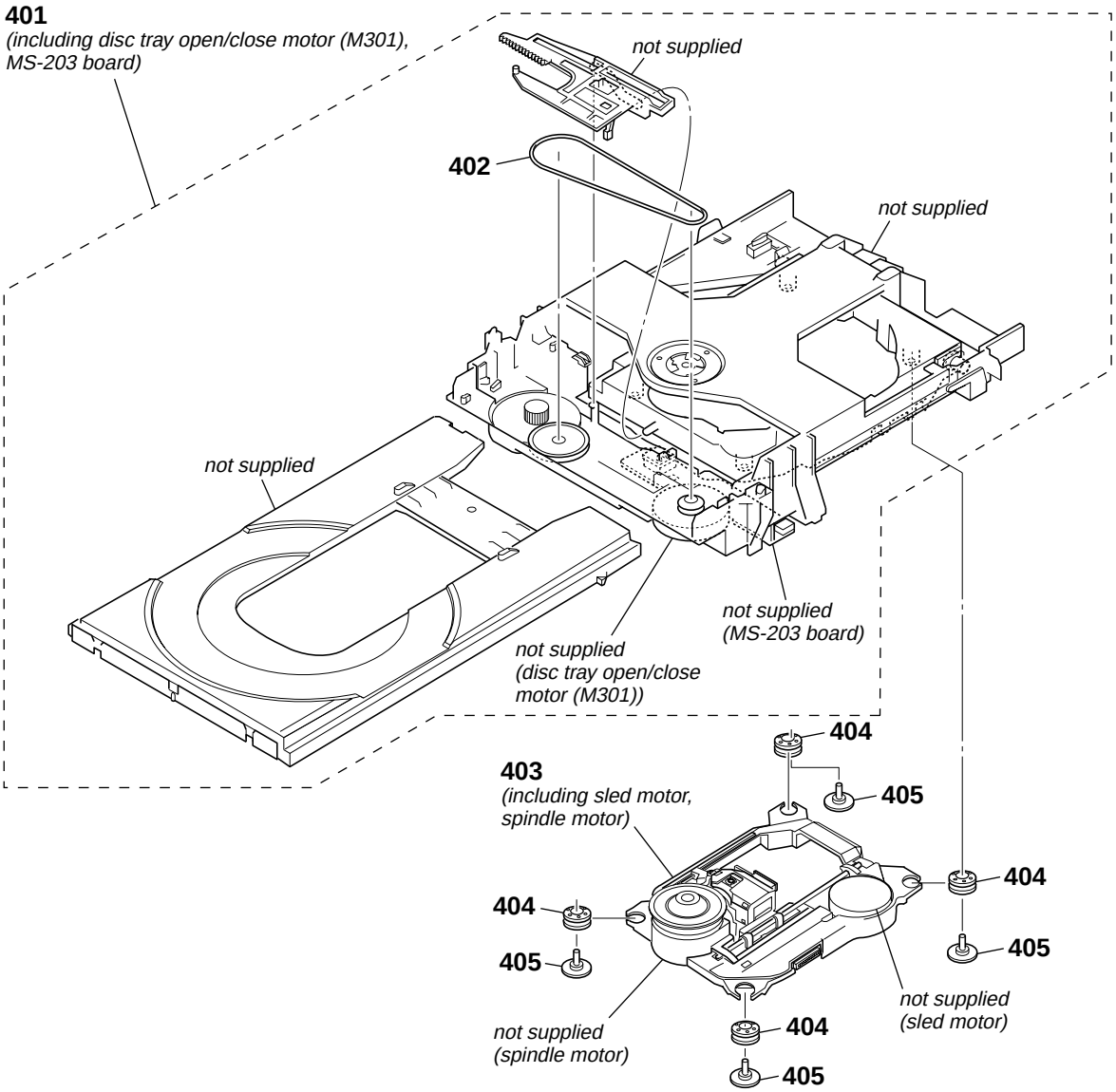

Ref. No.	Part No.	Description	Remark
401	A-6071-669-A	LOADING ASSY (M) (Including disc tray open/ close motor (M301), MS203 board)	
402	3-088-371-01	BELT	
⚠403	8-820-290-02	OPTICAL PICK-UP BLOCK KHM-310CAA/C2RP (Including sled motor, spindle motor)	
404	4-234-618-01	INSULATOR	
405	3-087-599-01	INSULATOR SCREW	

DMB10

SECTION 8
ELECTRICAL PARTS LIST

NOTE:

- Due to standardization, replacements in the parts list may be different from the parts specified in the diagrams or the components used on the set.
- -XX and -X mean standardized parts, so they may have some difference from the original one.
- RESISTORS
  All resistors are in ohms.
  METAL: Metal-film resistor.
  METAL OXIDE: Metal oxide-film resistor.
  F: nonflammable
- Abbreviation
  CND : Canadian model
  RU : Russian model
  SP : Singapore model
- Items marked "*" are not stocked since they are seldom required for routine service.
  Some delay should be anticipated when ordering these items.
- SEMICONDUCTORS
  In each case, u: µ, for example:
  uA... : µA... uPA... : µPA...
  uPB... : µPB... uPC... : µPC...
  uPD... : µPD...
- CAPACITORS
  uF: µF
- COILS
  uH: µH

The components identified by mark ⚠ or dotted line with mark ⚠ are critical for safety.
Replace only with part number specified.

Les composants identifiés par une marque ⚠ sont critiquens pour la sécurité.
Ne les remplacer que par une pièce portant le numéro spécifié.

When indicating parts by reference number, please include the board.

Ref. No.	Part No.	Description			Remark
	A-1107-247-A	DMB10 BOARD, COMPLETE (US, CND)			
	A-1107-248-A	DMB10 BOARD, COMPLETE (AEP, UK, RU)			
	A-1113-204-A	DMB10 BOARD, COMPLETE (SP)			
		**********			
		< CAPACITOR >			
C101	1-162-970-11	CERAMIC CHIP	0.01uF	10%	25V
C102	1-125-837-11	CERAMIC CHIP	1uF	10%	6.3V
C105	1-126-205-11	ELECT CHIP	47uF	20%	6.3V
C106	1-162-970-11	CERAMIC CHIP	0.01uF	10%	25V
C108	1-162-964-11	CERAMIC CHIP	0.001uF	10%	50V
C109	1-162-964-11	CERAMIC CHIP	0.001uF	10%	50V
C112	1-126-205-11	ELECT CHIP	47uF	20%	6.3V
C113	1-162-970-11	CERAMIC CHIP	0.01uF	10%	25V
C114	1-107-826-11	CERAMIC CHIP	0.1uF	10%	16V
C115	1-107-826-11	CERAMIC CHIP	0.1uF	10%	16V
C116	1-107-826-11	CERAMIC CHIP	0.1uF	10%	16V
C117	1-124-779-00	ELECT CHIP	10uF	20%	16V
C118	1-124-779-00	ELECT CHIP	10uF	20%	16V
C119	1-124-779-00	ELECT CHIP	10uF	20%	16V
C120	1-165-908-11	CERAMIC CHIP	1uF	10%	10V
C121	1-165-908-11	CERAMIC CHIP	1uF	10%	10V
C122	1-165-908-11	CERAMIC CHIP	1uF	10%	10V
C123	1-165-908-11	CERAMIC CHIP	1uF	10%	10V
C124	1-165-908-11	CERAMIC CHIP	1uF	10%	10V
C125	1-107-826-11	CERAMIC CHIP	0.1uF	10%	16V
C126	1-107-826-11	CERAMIC CHIP	0.1uF	10%	16V
C127	1-162-970-11	CERAMIC CHIP	0.01uF	10%	25V
C128	1-162-965-11	CERAMIC CHIP	0.0015uF	10%	50V
C129	1-124-779-00	ELECT CHIP	10uF	20%	16V
C130	1-107-826-11	CERAMIC CHIP	0.1uF	10%	16V
C131	1-125-838-11	CERAMIC CHIP	2.2uF	10%	6.3V
C132	1-107-826-11	CERAMIC CHIP	0.1uF	10%	16V
C133	1-107-826-11	CERAMIC CHIP	0.1uF	10%	16V
C135	1-164-677-11	CERAMIC CHIP	0.033uF	10%	16V
C136	1-162-970-11	CERAMIC CHIP	0.01uF	10%	25V
C137	1-107-826-11	CERAMIC CHIP	0.1uF	10%	16V
C138	1-162-964-11	CERAMIC CHIP	0.001uF	10%	50V
C139	1-162-919-11	CERAMIC CHIP	22PF	5%	50V
C140	1-107-826-11	CERAMIC CHIP	0.1uF	10%	16V
C141	1-107-826-11	CERAMIC CHIP	0.1uF	10%	16V
C142	1-107-826-11	CERAMIC CHIP	0.1uF	10%	16V
C143	1-107-826-11	CERAMIC CHIP	0.1uF	10%	16V
C144	1-162-970-11	CERAMIC CHIP	0.01uF	10%	25V
C145	1-165-908-11	CERAMIC CHIP	1uF	10%	10V
C146	1-107-826-11	CERAMIC CHIP	0.1uF	10%	16V
C147	1-165-176-11	CERAMIC CHIP	0.047uF	10%	16V
C148	1-165-176-11	CERAMIC CHIP	0.047uF	10%	16V
C149	1-107-826-11	CERAMIC CHIP	0.1uF	10%	16V
C150	1-124-779-00	ELECT CHIP	10uF	20%	16V
C151	1-115-416-11	CERAMIC CHIP	0.001uF	5%	25V
C152	1-162-916-11	CERAMIC CHIP	12PF	5%	50V
C153	1-162-916-11	CERAMIC CHIP	12PF	5%	50V
C154	1-107-826-11	CERAMIC CHIP	0.1uF	10%	16V
C155	1-162-970-11	CERAMIC CHIP	0.01uF	10%	25V
C156	1-162-970-11	CERAMIC CHIP	0.01uF	10%	25V
C158	1-162-970-11	CERAMIC CHIP	0.01uF	10%	25V
C159	1-162-970-11	CERAMIC CHIP	0.01uF	10%	25V
C160	1-162-970-11	CERAMIC CHIP	0.01uF	10%	25V
C161	1-162-970-11	CERAMIC CHIP	0.01uF	10%	25V
C162	1-162-970-11	CERAMIC CHIP	0.01uF	10%	25V
C163	1-162-970-11	CERAMIC CHIP	0.01uF	10%	25V
C164	1-162-970-11	CERAMIC CHIP	0.01uF	10%	25V
C167	1-162-970-11	CERAMIC CHIP	0.01uF	10%	25V
C170	1-162-970-11	CERAMIC CHIP	0.01uF	10%	25V
C171	1-162-970-11	CERAMIC CHIP	0.01uF	10%	25V
C172	1-162-970-11	CERAMIC CHIP	0.01uF	10%	25V
C173	1-162-970-11	CERAMIC CHIP	0.01uF	10%	25V
C174	1-162-970-11	CERAMIC CHIP	0.01uF	10%	25V
C175	1-162-970-11	CERAMIC CHIP	0.01uF	10%	25V
C176	1-162-970-11	CERAMIC CHIP	0.01uF	10%	25V
C177	1-126-205-11	ELECT CHIP	47uF	20%	6.3V
C178	1-126-208-21	ELECT CHIP	47uF	20%	4V
C179	1-107-826-11	CERAMIC CHIP	0.1uF	10%	16V
C180	1-107-826-11	CERAMIC CHIP	0.1uF	10%	16V
C181	1-107-826-11	CERAMIC CHIP	0.1uF	10%	16V
C182	1-127-715-11	CERAMIC CHIP	0.22uF	10%	16V
C184	1-162-970-11	CERAMIC CHIP	0.01uF	10%	25V
C187	1-126-208-21	ELECT CHIP	47uF	20%	4V
C188	1-127-715-11	CERAMIC CHIP	0.22uF	10%	16V
C189	1-128-934-11	CERAMIC CHIP	0.33uF	20%	10V
C190	1-126-205-11	ELECT CHIP	47uF	20%	6.3V
C191	1-107-826-11	CERAMIC CHIP	0.1uF	10%	16V
C192	1-162-970-11	CERAMIC CHIP	0.01uF	10%	25V
C193	1-127-715-11	CERAMIC CHIP	0.22uF	10%	16V
C195	1-127-715-11	CERAMIC CHIP	0.22uF	10%	16V
C196	1-162-968-11	CERAMIC CHIP	0.0047uF	10%	50V

Ref. No.	Part No.	Description			Remark
C203	1-162-970-11	CERAMIC CHIP	0.01uF	10%	25V
C205	1-164-230-11	CERAMIC CHIP	220PF	5%	50V
C206	1-164-230-11	CERAMIC CHIP	220PF	5%	50V
C208	1-162-970-11	CERAMIC CHIP	0.01uF	10%	25V
C209	1-164-677-11	CERAMIC CHIP	0.033uF	10%	16V
C210	1-162-970-11	CERAMIC CHIP	0.01uF	10%	25V
C211	1-164-677-11	CERAMIC CHIP	0.033uF	10%	16V
C212	1-162-970-11	CERAMIC CHIP	0.01uF	10%	25V
C213	1-162-970-11	CERAMIC CHIP	0.01uF	10%	25V
C214	1-162-964-11	CERAMIC CHIP	0.001uF	10%	50V
C215	1-162-970-11	CERAMIC CHIP	0.01uF	10%	25V
C217	1-126-204-11	ELECT CHIP	47uF	20%	16V
C218	1-124-779-00	ELECT CHIP	10uF	20%	16V
C219	1-162-970-11	CERAMIC CHIP	0.01uF	10%	25V
C220	1-124-779-00	ELECT CHIP	10uF	20%	16V
C221	1-107-826-11	CERAMIC CHIP	0.1uF	10%	16V
C222	1-107-826-11	CERAMIC CHIP	0.1uF	10%	16V
C223	1-107-826-11	CERAMIC CHIP	0.1uF	10%	16V
C224	1-162-970-11	CERAMIC CHIP	0.01uF	10%	25V
C225	1-162-964-11	CERAMIC CHIP	0.001uF	10%	50V
C226	1-162-964-11	CERAMIC CHIP	0.001uF	10%	50V
C233	1-162-968-11	CERAMIC CHIP	0.0047uF	10%	50V
C308	1-216-864-11	SHORT CHIP	0		
C402	1-126-204-11	ELECT CHIP	47uF	20%	16V
C403	1-126-205-11	ELECT CHIP	47uF	20%	6.3V
C4801	1-162-970-11	CERAMIC CHIP	0.01uF	10%	25V (US, CND)
C4802	1-162-970-11	CERAMIC CHIP	0.01uF	10%	25V (US, CND)
C4803	1-117-370-11	CERAMIC CHIP	10uF		10V (US, CND)
		< CONNECTOR >			
CN101	1-815-763-32	CONNECTOR, FFC/FPC 24P			
* CN105	1-770-470-21	PIN, CONNECTOR (PC BOARD) 6P			
CN106	1-784-370-21	CONNECTOR, FFC/FPC 11P			
* CN201	1-770-470-21	PIN, CONNECTOR (PC BOARD) 6P			
CN202	1-784-365-21	CONNECTOR, FFC/FPC 5P			
CN301	1-793-989-21	FFC/CONNECTOR, FPC (LIF (NON-ZIF)) 13P (EXCEPT US, CND)			
CN401	1-779-993-11	PIN, CONNECTOR (PWB) 5P			
CN4501	1-784-370-21	CONNECTOR, FFC/FPC 11P			
CN4801	1-779-338-51	CONNECTOR, FFC/FPC 28P (US, CND)			
CN4802	1-779-330-51	CONNECTOR, FFC/FPC 12P (US, CND)			
		< DIODE >			
D1001	8-719-058-24	DIODE RB501V-40TE-17			
		< FERRITE BEAD >			
FB111	1-414-226-21	INDUCTOR, FERRITE BEAD			
FB112	1-414-226-21	INDUCTOR, FERRITE BEAD			
FB113	1-414-226-21	INDUCTOR, FERRITE BEAD			
FB114	1-414-226-21	INDUCTOR, FERRITE BEAD			
FB115	1-216-864-11	SHORT CHIP	0		
FB401	1-469-324-21	FERRITE, EMI (SMD) (2012)			
FB402	1-469-324-21	FERRITE, EMI (SMD) (2012)			
FB403	1-469-324-21	FERRITE, EMI (SMD) (2012)			
FB404	1-469-324-21	FERRITE, EMI (SMD) (2012)			
FB405	1-469-324-21	FERRITE, EMI (SMD) (2012)			

Ref. No.	Part No.	Description			Remark
FB406	1-469-324-21	FERRITE, EMI (SMD) (2012)			
		< FLUORESCENT INDICATOR >			
FL101	1-234-177-21	FILTER, CHIP EMI			
FL104	1-234-177-21	FILTER, CHIP EMI			
FL105	1-234-177-21	FILTER, CHIP EMI			
FL106	1-234-177-21	FILTER, CHIP EMI			
FL107	1-234-177-21	FILTER, CHIP EMI			
FL108	1-234-177-21	FILTER, CHIP EMI			
FL401	1-234-177-21	FILTER, CHIP EMI			
FL402	1-233-893-21	FILTER, CHIP EMI			
FL403	1-234-177-21	FILTER, CHIP EMI			
FL4801	1-234-177-21	FILTER, CHIP EMI (US, CND)			
		< IC >			
IC101	6-805-768-01	IC MX29LV320ABTC65-OED2-0503CE (AEP, UK, RU)			
IC101	6-805-769-01	IC MX29LV320ABTC65-OED2-0503GA (SP)			
IC101	6-805-770-01	IC MX29LV320ABTC65-OHD1-0503UC (US, CND)			
IC102	6-706-727-01	IC CXD9804R			
IC103	(Not supplied)	IC BR24L64F-WE2			
IC104	6-706-390-11	IC HY57V641620HGTP-HDR			
IC105	6-702-302-01	IC TK11133CSCL-G			
IC106	6-708-153-01	IC PQ018EN01ZPH			
IC107	6-702-302-01	IC TK11133CSCL-G			
IC201	6-704-524-01	IC FAN8036L			
IC4801	6-703-589-01	IC SN74LVC1G125DCKR (US, CND)			
IC4802	6-703-589-01	IC SN74LVC1G125DCKR (US, CND)			
		< TRANSISTOR >			
Q101	6-550-008-01	FET	UM6K1N-TN		
Q102	6-550-653-01	TRANSISTOR	QST8TR		
Q103	8-729-027-52	TRANSISTOR	DTC124EKA-T146		
		< RESISTOR/FERRITE BEAD >			
R101	1-216-809-11	METAL CHIP	100	5%	1/10W
R104	1-216-864-11	SHORT CHIP	0		
R105	1-216-833-11	METAL CHIP	10K	5%	1/10W
R106	1-216-833-11	METAL CHIP	10K	5%	1/10W
R107	1-216-833-11	METAL CHIP	10K	5%	1/10W
R108	1-216-857-11	METAL CHIP	1M	5%	1/10W
R109	1-216-864-11	SHORT CHIP	0		
R110	1-216-841-11	METAL CHIP	47K	5%	1/10W
R111	1-216-809-11	METAL CHIP	100	5%	1/10W
R112	1-211-977-11	METAL CHIP	22	0.5%	1/10W
R113	1-211-977-11	METAL CHIP	22	0.5%	1/10W
R114	1-216-845-11	METAL CHIP	100K	5%	1/10W
R115	1-211-977-11	METAL CHIP	22	0.5%	1/10W
R116	1-216-821-11	METAL CHIP	1K	5%	1/10W
R117	1-216-841-11	METAL CHIP	47K	5%	1/10W
R118	1-216-801-11	METAL CHIP	22	5%	1/10W
R120	1-216-801-11	METAL CHIP	22	5%	1/10W
R121	1-216-801-11	METAL CHIP	22	5%	1/10W
R123	1-216-864-11	SHORT CHIP	0		
R124	1-216-841-11	METAL CHIP	47K	5%	1/10W
R126	1-216-864-11	SHORT CHIP	0		

DMB10

Ref. No.	Part No.	Description			Remark
R133	1-216-827-11	METAL CHIP	3.3K	5%	1/10W
R134	1-216-827-11	METAL CHIP	3.3K	5%	1/10W
R135	1-216-827-11	METAL CHIP	3.3K	5%	1/10W
R136	1-216-835-11	METAL CHIP	15K	5%	1/10W
R138	1-216-845-11	METAL CHIP	100K	5%	1/10W
R141	1-218-916-11	METAL CHIP	750K	0.5%	1/10W
R142	1-216-845-11	METAL CHIP	100K	5%	1/10W
R143	1-216-809-11	METAL CHIP	100	5%	1/10W
R144	1-216-864-11	SHORT CHIP	0		
R146	1-216-805-11	METAL CHIP	47	5%	1/10W
R151	1-216-805-11	METAL CHIP	47	5%	1/10W
R152	1-216-864-11	SHORT CHIP	0		
R153	1-216-805-11	METAL CHIP	47	5%	1/10W
R155	1-216-805-11	METAL CHIP	47	5%	1/10W
R160	1-216-805-11	METAL CHIP	47	5%	1/10W
R161	1-216-809-11	METAL CHIP	100	5%	1/10W
R164	1-216-809-11	METAL CHIP	100	5%	1/10W
R169	1-216-833-11	METAL CHIP	10K	5%	1/10W
R187	1-216-864-11	SHORT CHIP	0		
R189	1-218-827-11	METAL CHIP	150	0.5%	1/10W (EXCEPT US, CND)
R190	1-218-827-11	METAL CHIP	150	0.5%	1/10W (EXCEPT US, CND)
R191	1-216-821-11	METAL CHIP	1K	5%	1/10W
R192	1-218-827-11	METAL CHIP	150	0.5%	1/10W (EXCEPT US, CND)
R193	1-216-821-11	METAL CHIP	1K	5%	1/10W
R195	1-218-827-11	METAL CHIP	150	0.5%	1/10W (EXCEPT US, CND)
R196	1-216-864-11	SHORT CHIP	0		
R197	1-218-827-11	METAL CHIP	150	0.5%	1/10W (EXCEPT US, CND)
R204	1-216-822-11	METAL CHIP	1.2K	5%	1/10W
R205	1-216-833-11	METAL CHIP	10K	5%	1/10W
R206	1-216-833-11	METAL CHIP	10K	5%	1/10W
R207	1-216-826-11	METAL CHIP	2.7K	5%	1/10W
R208	1-216-839-11	METAL CHIP	33K	5%	1/10W
R209	1-216-839-11	METAL CHIP	33K	5%	1/10W
R210	1-216-841-11	METAL CHIP	47K	5%	1/10W
R212	1-216-833-11	METAL CHIP	10K	5%	1/10W
R213	1-218-867-11	METAL CHIP	6.8K	0.5%	1/10W
R214	1-216-835-11	METAL CHIP	15K	5%	1/10W
R215	1-216-834-11	METAL CHIP	12K	5%	1/10W
R216	1-216-834-11	METAL CHIP	12K	5%	1/10W
R219	1-216-838-11	METAL CHIP	27K	5%	1/10W
R220	1-216-833-11	METAL CHIP	10K	5%	1/10W
R221	1-218-889-11	METAL CHIP	56K	0.5%	1/10W
R222	1-216-839-11	METAL CHIP	33K	5%	1/10W
R223	1-218-895-11	METAL CHIP	100K	0.5%	1/10W
R224	1-216-833-11	METAL CHIP	10K	5%	1/10W
R225	1-218-895-11	METAL CHIP	100K	0.5%	1/10W
R226	1-218-889-11	METAL CHIP	56K	0.5%	1/10W
R227	1-216-864-11	SHORT CHIP	0		
R228	1-216-864-11	SHORT CHIP	0		
R230	1-218-893-11	METAL CHIP	82K	0.5%	1/10W
R231	1-218-875-11	METAL CHIP	15K	0.5%	1/10W
R232	1-218-877-11	METAL CHIP	18K	0.5%	1/10W
R233	1-218-883-11	METAL CHIP	33K	0.5%	1/10W
R234	1-216-833-11	METAL CHIP	10K	5%	1/10W
R236	1-216-821-11	METAL CHIP	1K	5%	1/10W
R237	1-216-821-11	METAL CHIP	1K	5%	1/10W
R238	1-216-829-11	METAL CHIP	4.7K	5%	1/10W
R239	1-216-829-11	METAL CHIP	4.7K	5%	1/10W
R243	1-216-809-11	METAL CHIP	100	5%	1/10W
R246	1-216-829-11	METAL CHIP	4.7K	5%	1/10W
R247	1-216-821-11	METAL CHIP	1K	5%	1/10W
R308	1-216-864-11	SHORT CHIP	0		
R1101	1-216-818-11	METAL CHIP	560	5%	1/10W (US, CND)
R1101	1-216-825-11	METAL CHIP	2.2K	5%	1/10W (EXCEPT US, CND)
R1102	1-218-827-11	METAL CHIP	150	0.5%	1/10W (EXCEPT US, CND)
R1103	1-216-833-11	METAL CHIP	10K	5%	1/10W
R1104	1-216-833-11	METAL CHIP	10K	5%	1/10W
R1105	1-216-833-11	METAL CHIP	10K	5%	1/10W
R1107	1-216-864-11	SHORT CHIP	0		
R1108	1-216-833-11	METAL CHIP	10K	5%	1/10W
R1109	1-216-864-11	SHORT CHIP	0		
R1110	1-216-826-11	METAL CHIP	2.7K	5%	1/10W
R1111	1-216-864-11	SHORT CHIP	0		
R1120	1-216-864-11	SHORT CHIP	0 (EXCEPT US, CND)		
R1121	1-216-864-11	SHORT CHIP	0 (EXCEPT US, CND)		
R1122	1-216-864-11	SHORT CHIP	0 (EXCEPT US, CND)		
R1123	1-216-864-11	SHORT CHIP	0 (EXCEPT US, CND)		
R1124	1-216-864-11	SHORT CHIP	0 (EXCEPT US, CND)		
R1125	1-216-864-11	SHORT CHIP	0 (EXCEPT US, CND)		
R1129	1-216-845-11	METAL CHIP	100K	5%	1/10W
R1133	1-216-864-11	SHORT CHIP	0		
R1134	1-216-864-11	SHORT CHIP	0		
R1150	1-216-827-11	METAL CHIP	3.3K	5%	1/10W
R1151	1-216-827-11	METAL CHIP	3.3K	5%	1/10W
R1152	1-216-827-11	METAL CHIP	3.3K	5%	1/10W
R1168	1-216-817-11	METAL CHIP	470	5%	1/10W
R1502	1-216-864-11	SHORT CHIP	0		
R1504	1-414-226-21	INDUCTOR, FERRITE BEAD			
R1505	1-216-833-11	METAL CHIP	10K	5%	1/10W (US, CND)
R1506	1-216-864-11	SHORT CHIP	0 (US, CND)		
R1508	1-500-282-11	INDUCTOR, FERRITE BEAD (US, CND)			
R1510	1-216-864-11	SHORT CHIP	0 (US, CND)		
R1511	1-500-282-11	INDUCTOR, FERRITE BEAD (US, CND)			
R1512	1-500-282-11	INDUCTOR, FERRITE BEAD (US, CND)			
R1513	1-500-282-11	INDUCTOR, FERRITE BEAD (US, CND)			
R1514	1-500-282-11	INDUCTOR, FERRITE BEAD (US, CND)			
R1515	1-500-282-11	INDUCTOR, FERRITE BEAD (US, CND)			
R1516	1-500-282-11	INDUCTOR, FERRITE BEAD (US, CND)			
R1517	1-500-282-11	INDUCTOR, FERRITE BEAD (US, CND)			
R1518	1-500-282-11	INDUCTOR, FERRITE BEAD (US, CND)			
R1519	1-216-803-11	METAL CHIP	33	5%	1/10W (US, CND)
R1520	1-216-803-11	METAL CHIP	33	5%	1/10W (US, CND)
R1521	1-216-821-11	METAL CHIP	1K	5%	1/10W (US, CND)
R1522	1-216-864-11	SHORT CHIP	0 (US, CND)		
R1523	1-216-864-11	SHORT CHIP	0 (US, CND)		

Ref. No.	Part No.	Description			Remark
R1528	1-216-864-11	SHORT CHIP	0 (US, CND)		
R1530	1-216-864-11	SHORT CHIP	0		
R1531	1-216-864-11	SHORT CHIP	0		
R1540	1-216-829-11	METAL CHIP	4.7K	5%	1/10W
R1542	1-216-864-11	SHORT CHIP	0 (EXCEPT US, CND)		
R1543	1-216-833-11	METAL CHIP	10K	5%	1/10W (EXCEPT US, CND)
R1545	1-216-864-11	SHORT CHIP	0		
R1546	1-216-827-11	METAL CHIP	3.3K	5%	1/10W
R1547	1-216-829-11	METAL CHIP	4.7K	5%	1/10W
R1548	1-216-829-11	METAL CHIP	4.7K	5%	1/10W
R1549	1-216-829-11	METAL CHIP	4.7K	5%	1/10W
R1550	1-216-829-11	METAL CHIP	4.7K	5%	1/10W
R1551	1-216-829-11	METAL CHIP	4.7K	5%	1/10W
R1552	1-216-824-11	METAL CHIP	1.8K	5%	1/10W (US, CND)
R1553	1-216-864-11	SHORT CHIP	0		
R1554	1-216-829-11	METAL CHIP	4.7K	5%	1/10W
R1555	1-216-829-11	METAL CHIP	4.7K	5%	1/10W
R1557	1-216-809-11	METAL CHIP	100	5%	1/10W
R2505	1-216-864-11	SHORT CHIP	0		
R3610	1-216-864-11	SHORT CHIP	0		
R4501	1-216-864-11	SHORT CHIP	0		
R4502	1-216-864-11	SHORT CHIP	0		
R4503	1-216-864-11	SHORT CHIP	0		
R4504	1-216-864-11	SHORT CHIP	0		
R4505	1-216-864-11	SHORT CHIP	0		
R4506	1-216-864-11	SHORT CHIP	0		
R4507	1-216-864-11	SHORT CHIP	0		
R4508	1-216-864-11	SHORT CHIP	0		
R4510	1-216-864-11	SHORT CHIP	0		
R4511	1-216-864-11	SHORT CHIP	0		
R4512	1-216-797-11	METAL CHIP	10	5%	1/10W (EXCEPT US, CND)
R4512	1-216-864-11	SHORT CHIP	0 (US, CND)		
R4513	1-216-864-11	SHORT CHIP	0		
R4514	1-216-864-11	SHORT CHIP	0		
R4515	1-216-864-11	SHORT CHIP	0		
R4516	1-216-864-11	SHORT CHIP	0		
R4701	1-216-864-11	SHORT CHIP	0 (EXCEPT US, CND)		
R4702	1-216-864-11	SHORT CHIP	0 (EXCEPT US, CND)		
R4703	1-216-864-11	SHORT CHIP	0 (EXCEPT US, CND)		
R4704	1-216-864-11	SHORT CHIP	0 (EXCEPT US, CND)		
R4705	1-216-864-11	SHORT CHIP	0 (EXCEPT US, CND)		
R4706	1-216-864-11	SHORT CHIP	0 (EXCEPT US, CND)		
R4801	1-216-864-11	SHORT CHIP	0 (US, CND)		
R4802	1-216-864-11	SHORT CHIP	0 (US, CND)		
R4803	1-216-864-11	SHORT CHIP	0 (US, CND)		
R4804	1-216-864-11	SHORT CHIP	0 (US, CND)		
R4805	1-400-244-11	BEAD, FERRITE (CHIP) (1608) (US, CND)			
R4806	1-216-806-11	METAL CHIP	56	5%	1/10W (US, CND)
R5007	1-216-864-11	SHORT CHIP	0		
R5010	1-216-864-11	SHORT CHIP	0		
R5014	1-216-864-11	SHORT CHIP	0 (US, CND)		
R5016	1-216-864-11	SHORT CHIP	0 (AEP, UK, RU)		
R5017	1-216-864-11	SHORT CHIP	0 (SP)		

Ref. No.	Part No.	Description			Remark
		< COMPOSITION CIRCUIT BLOCK >			
RB103	1-234-795-21	RES, NETWORK	0 (2010)		
RB104	1-234-795-21	RES, NETWORK	0 (2010)		
RB105	1-234-371-21	RES, NETWORK	47 (1005X4)		
RB106	1-234-371-21	RES, NETWORK	47 (1005X4)		
RB107	1-234-370-21	RES, NETWORK	22 (1005X4)		
RB108	1-234-370-21	RES, NETWORK	22 (1005X4)		
RB111	1-234-795-21	RES, NETWORK	0 (2010)		
RB112	1-234-370-21	RES, NETWORK	22 (1005X4)		
RB113	1-234-370-21	RES, NETWORK	22 (1005X4)		
		< VIBRATOR >			
X101	1-781-867-21	VIBRATOR, CRYSTAL (27MHz)			
**********					
	A-1107-213-A	FL BOARD, COMPLETE			
		**********			
		< CAPACITOR >			
C843	1-162-970-11	CERAMIC CHIP	0.01uF	10%	25V
C844	1-126-795-11	ELECT	10uF	20%	50V
C845	1-124-584-00	ELECT	100uF	20%	10V
C846	1-163-037-11	CERAMIC CHIP	0.022uF	10%	50V
C847	1-162-968-11	CERAMIC CHIP	0.0047uF	10%	50V
C848	1-162-974-11	CERAMIC CHIP	0.01uF		50V
C849	1-126-795-11	ELECT	10uF	20%	50V
C850	1-164-360-11	CERAMIC CHIP	0.1uF		16V
C851	1-162-960-11	CERAMIC CHIP	220PF	10%	50V
C852	1-162-960-11	CERAMIC CHIP	220PF	10%	50V
C853	1-162-960-11	CERAMIC CHIP	220PF	10%	50V
C854	1-162-960-11	CERAMIC CHIP	220PF	10%	50V
C855	1-162-960-11	CERAMIC CHIP	220PF	10%	50V
C856	1-162-960-11	CERAMIC CHIP	220PF	10%	50V
C857	1-162-960-11	CERAMIC CHIP	220PF	10%	50V
C858	1-162-960-11	CERAMIC CHIP	220PF	10%	50V
C859	1-162-960-11	CERAMIC CHIP	220PF	10%	50V
C860	1-162-960-11	CERAMIC CHIP	220PF	10%	50V
C861	1-162-960-11	CERAMIC CHIP	220PF	10%	50V
C865	1-162-974-11	CERAMIC CHIP	0.01uF		50V
C866	1-162-923-11	CERAMIC CHIP	47PF	5%	50V
C867	1-162-974-11	CERAMIC CHIP	0.01uF		50V
C868	1-162-927-11	CERAMIC CHIP	100PF	5%	50V
C869	1-162-927-11	CERAMIC CHIP	100PF	5%	50V
C870	1-162-927-11	CERAMIC CHIP	100PF	5%	50V
C871	1-164-360-11	CERAMIC CHIP	0.1uF		16V
C872	1-117-370-11	CERAMIC CHIP	10uF		10V
C878	1-164-360-11	CERAMIC CHIP	0.1uF		16V
		< CONNECTOR >			
CN841	1-793-580-11	CONNECTOR, FFC (LIF (NON-Z1F)) 15P			
		< DIODE >			
D841	8-719-085-33	LED SLI-343URCT32WST (STANDBY)			
D842	8-719-988-61	DIODE 1SS355TE-17			
D843	8-719-988-61	DIODE 1SS355TE-17			
D844	8-719-988-61	DIODE 1SS355TE-17			
D845	8-719-988-61	DIODE 1SS355TE-17			

FL IO

Ref. No.	Part No.	Description			Remark
D846	8-719-069-56	DIODE UDZSTE-176.2B			
		< FERRITE BEAD >			
FB841	1-414-813-11	FERRITE, EMI (SMD) (2012)			
		< FLUORESCENT INDICATOR >			
FL841	1-519-818-11	INDICATOR TUBE, FLUORESCENT			
		< IC >			
IC841	6-600-349-21	IC NJL23H400A			
IC842	6-705-899-01	IC ML9208-03MBZ03B			
		< JUMPER RESISTOR/COIL >			
L841	1-216-864-11	SHORT CHIP	0		
L842	1-410-671-31	INDUCTOR	47uH		
		< FET >			
Q841	6-550-065-01	FET	CPH5504-TL-E		
		< RESISTOR >			
R841	1-216-864-11	SHORT CHIP	0		
R842	1-216-821-11	METAL CHIP	1K	5%	1/10W
R843	1-216-864-11	SHORT CHIP	0		
R844	1-216-805-11	METAL CHIP	47	5%	1/10W
R849	1-216-864-11	SHORT CHIP	0		
R850	1-216-864-11	SHORT CHIP	0		
R851	1-216-828-11	METAL CHIP	3.9K	5%	1/10W
R852	1-216-839-11	METAL CHIP	33K	5%	1/10W
R853	1-216-809-11	METAL CHIP	100	5%	1/10W
R863	1-216-827-11	METAL CHIP	3.3K	5%	1/10W
R865	1-216-809-11	METAL CHIP	100	5%	1/10W
R866	1-216-809-11	METAL CHIP	100	5%	1/10W
R867	1-216-809-11	METAL CHIP	100	5%	1/10W
R868	1-216-809-11	METAL CHIP	100	5%	1/10W
R869	1-216-833-11	METAL CHIP	10K	5%	1/10W
		< SWITCH >			
S841	1-762-875-21	SWITCH, KEYBOARD (I/⏻)			
S842	1-762-875-21	SWITCH, KEYBOARD (⏏)			
		< TRANSFORMER >			
T841	1-443-757-11	TRANSFORMER, DC-DC CONVERTER			

****

	A-1107-219-A	IO BOARD, COMPLETE (US, CND)			
	A-1107-220-A	IO BOARD, COMPLETE (AEP, UK, RU)			
	A-1108-020-A	IO BOARD, COMPLETE (SP)			
		**********			
		< CAPACITOR >			
C901	1-162-960-11	CERAMIC CHIP	220PF	10%	50V
C902	1-162-960-11	CERAMIC CHIP	220PF	10%	50V
C903	1-162-960-11	CERAMIC CHIP	220PF	10%	50V
C904	1-162-960-11	CERAMIC CHIP	220PF	10%	50V
C905	1-162-960-11	CERAMIC CHIP	220PF	10%	50V (US, CND, SP)
C906	1-162-960-11	CERAMIC CHIP	220PF	10%	50V (US, CND, SP)
C907	1-117-681-11	ELECT CHIP	100uF	20%	16V
C908	1-164-156-11	CERAMIC CHIP	0.1uF		25V
C909	1-117-681-11	ELECT CHIP	100uF	20%	16V
C910	1-164-156-11	CERAMIC CHIP	0.1uF		25V
C911	1-117-681-11	ELECT CHIP	100uF	20%	16V
C912	1-164-156-11	CERAMIC CHIP	0.1uF		25V
C913	1-126-193-11	ELECT CHIP	1uF	20%	50V
C914	1-164-156-11	CERAMIC CHIP	0.1uF		25V
C915	1-162-927-11	CERAMIC CHIP	100PF	5%	50V
C916	1-124-779-00	ELECT CHIP	10uF	20%	16V
C917	1-126-933-11	ELECT	100uF	20%	16V
C918	1-164-156-11	CERAMIC CHIP	0.1uF		25V
C919	1-115-156-11	CERAMIC CHIP	1uF		10V
C920	1-115-156-11	CERAMIC CHIP	1uF		10V
C921	1-115-156-11	CERAMIC CHIP	1uF		10V
C922	1-126-935-11	ELECT	470uF	20%	16V
C923	1-164-156-11	CERAMIC CHIP	0.1uF		25V
C924	1-126-916-11	ELECT	1000uF	20%	6.3V
C925	1-126-916-11	ELECT	1000uF	20%	6.3V
C926	1-126-916-11	ELECT	1000uF	20%	6.3V
C927	1-126-916-11	ELECT	1000uF	20%	6.3V
C928	1-126-916-11	ELECT	1000uF	20%	6.3V
C929	1-164-156-11	CERAMIC CHIP	0.1uF		25V
C930	1-124-779-00	ELECT CHIP	10uF	20%	16V
C931	1-124-779-00	ELECT CHIP	10uF	20%	16V
C932	1-124-779-00	ELECT CHIP	10uF	20%	16V
C933	1-124-779-00	ELECT CHIP	10uF	20%	16V
C934	1-124-779-00	ELECT CHIP	10uF	20%	16V
C935	1-124-779-00	ELECT CHIP	10uF	20%	16V
C936	1-124-779-00	ELECT CHIP	10uF	20%	16V
C937	1-124-779-00	ELECT CHIP	10uF	20%	16V
C938	1-124-779-00	ELECT CHIP	10uF	20%	16V
		< CONNECTOR >			
CN901	1-778-691-11	CONNECTOR, FFC/FPC 19P			
CN902	1-793-989-21	FFC/CONNECTOR, FPC (LIF (NON-ZIF)) 13P			
CN903	1-784-778-11	CONNECTOR, FFC 17P (AEP, UK, RU)			
		< DIODE >			
D901	8-719-988-61	DIODE 1SS355TE-17 (AEP, UK, RU)			
D902	8-719-988-61	DIODE 1SS355TE-17 (AEP, UK, RU)			
		< EARTH TERMINAL >			
EP901	1-537-738-21	TERMINAL, GROUND			
EP902	1-537-738-21	TERMINAL, GROUND			
		< IC >			
IC901	6-707-489-01	IC BH7868FS-E2			
IC902	8-759-696-10	IC NJM2235V (TE2)			
IC903	8-759-696-10	IC NJM2235V (TE2)			
IC904	8-759-696-10	IC NJM2235V (TE2)			
		< JACK >			
J901	1-784-429-11	JACK, PIN 4P (VIDEO 1/SAT1/VIDEO 2/ SAT2 AUDIO IN) (AEP, UK, RU)			

Ref. No.	Part No.	Description			Remark
J901	1-784-920-11	JACK, PIN 6P (VIDEO 1/SAT1/VIDEO 2/SAT2/ TV AUDIO IN) (US, CND, SP)			
J902	1-694-920-21	TERMINAL BOARD (S TERMINAL+1P) (VIDEO 1/SAT 1 VIDEO/S-VIDEO IN)			
J903	1-694-920-21	TERMINAL BOARD (S TERMINAL+1P) (VIDEO 2/SAT 2 VIDEO/S-VIDEO IN)			
J904	1-694-920-21	TERMINAL BOARD (S TERMINAL+1P) (MONITOR OUT VIDEO/S-VIDEO)			
J905	1-793-445-11	JACK, PIN 3P (COMPONENT VIDEO OUT)			
		< COIL >			
L901	1-469-525-11	INDUCTOR	10uH		
L902	1-469-525-11	INDUCTOR	10uH		
L903	1-469-525-11	INDUCTOR	10uH		
L904	1-469-525-11	INDUCTOR	10uH		
		< TRANSISTOR >			
Q901	8-729-027-52	TRANSISTOR	DTC124EKA-T146		
Q903	8-729-027-43	TRANSISTOR	DTC114EKA-T146		(AEP, UK, RU)
		< RESISTOR >			
R901	1-216-821-11	METAL CHIP	1K	5%	1/10W
R902	1-216-821-11	METAL CHIP	1K	5%	1/10W
R903	1-216-821-11	METAL CHIP	1K	5%	1/10W
R904	1-216-821-11	METAL CHIP	1K	5%	1/10W
R905	1-216-821-11	METAL CHIP	1K	5%	1/10W (US, CND, SP)
R906	1-216-821-11	METAL CHIP	1K	5%	1/10W (US, CND, SP)
R907	1-216-845-11	METAL CHIP	100K	5%	1/10W
R908	1-216-845-11	METAL CHIP	100K	5%	1/10W
R909	1-216-845-11	METAL CHIP	100K	5%	1/10W
R910	1-216-845-11	METAL CHIP	100K	5%	1/10W
R911	1-216-845-11	METAL CHIP	100K	5%	1/10W (US, CND, SP)
R912	1-216-845-11	METAL CHIP	100K	5%	1/10W (US, CND, SP)
R913	1-218-285-11	METAL CHIP	75	5%	1/10W
R914	1-218-285-11	METAL CHIP	75	5%	1/10W
R915	1-218-285-11	METAL CHIP	75	5%	1/10W
R916	1-218-285-11	METAL CHIP	75	5%	1/10W
R917	1-218-285-11	METAL CHIP	75	5%	1/10W
R918	1-218-285-11	METAL CHIP	75	5%	1/10W
R919	1-216-833-11	METAL CHIP	10K	5%	1/10W
R920	1-216-864-11	SHORT CHIP	0		
R921	1-216-864-11	SHORT CHIP	0		
R922	1-216-864-11	SHORT CHIP	0		
R923	1-216-864-11	SHORT CHIP	0		
R924	1-216-864-11	SHORT CHIP	0		
R925	1-216-821-11	METAL CHIP	1K	5%	1/10W
R926	1-216-864-11	SHORT CHIP	0		
R927	1-216-864-11	SHORT CHIP	0		
R928	1-216-809-11	METAL CHIP	100	5%	1/10W
R933	1-216-821-11	METAL CHIP	1K	5%	1/10W (AEP, UK, RU)
R934	1-218-285-11	METAL CHIP	75	5%	1/10W
R935	1-218-285-11	METAL CHIP	75	5%	1/10W
R936	1-218-285-11	METAL CHIP	75	5%	1/10W
R937	1-218-285-11	METAL CHIP	75	5%	1/10W
R938	1-218-285-11	METAL CHIP	75	5%	1/10W
R939	1-218-285-11	METAL CHIP	75	5%	1/10W
R940	1-216-833-11	METAL CHIP	10K	5%	1/10W (AEP, UK, RU)
R951	1-216-805-11	METAL CHIP	47	5%	1/10W (EXCEPT US, CND)
R951	1-216-864-11	SHORT CHIP	0 (US, CND)		
R952	1-216-864-11	SHORT CHIP	0		
R953	1-216-864-11	SHORT CHIP	0		

****

	A-1107-205-A	MAIN BOARD, COMPLETE (US, CND)			
	A-1107-206-A	MAIN BOARD, COMPLETE (AEP, UK)			
	A-1107-207-A	MAIN BOARD, COMPLETE (RU)			
	A-1108-015-A	MAIN BOARD, COMPLETE (SP)			
		**********			
	2-436-530-01	SCREW +P TP 3*8 BT			
		< CAPACITOR >			
C11	1-117-681-11	ELECT CHIP	100uF	20%	16V
C12	1-100-566-91	CERAMIC CHIP	0.1uF	10%	25V
C13	1-165-900-11	ELECT BL C	100uF	20%	16V
C14	1-128-992-21	ELECT CHIP	47uF	20%	25V
C15	1-100-566-91	CERAMIC CHIP	0.1uF	10%	25V
C16	1-117-681-11	ELECT CHIP	100uF	20%	16V
C17	1-117-681-11	ELECT CHIP	100uF	20%	16V
C18	1-100-566-91	CERAMIC CHIP	0.1uF	10%	25V
C19	1-117-681-11	ELECT CHIP	100uF	20%	16V
C20	1-107-726-91	CERAMIC CHIP	0.01uF	10%	16V (US, CND)
C23	1-126-949-11	ELECT	220uF	20%	35V (US, CND)
C27	1-117-316-51	ELECT	470uF	20%	25V (US, CND)
C28	1-117-681-11	ELECT CHIP	100uF	20%	16V (US, CND)
C29	1-107-726-91	CERAMIC CHIP	0.01uF	10%	16V (US, CND)
C30	1-126-206-11	ELECT CHIP	100uF	20%	6.3V (US, CND)
C31	1-107-826-11	CERAMIC CHIP	0.1uF	10%	16V (US, CND)
C501	1-126-206-11	ELECT CHIP	100uF	20%	6.3V
C502	1-126-916-11	ELECT	1000uF	20%	6.3V
C504	1-107-826-11	CERAMIC CHIP	0.1uF	10%	16V
C505	1-107-826-11	CERAMIC CHIP	0.1uF	10%	16V
C506	1-107-826-11	CERAMIC CHIP	0.1uF	10%	16V
C508	1-107-826-11	CERAMIC CHIP	0.1uF	10%	16V
C509	1-107-826-11	CERAMIC CHIP	0.1uF	10%	16V
C510	1-107-826-11	CERAMIC CHIP	0.1uF	10%	16V
C511	1-107-826-11	CERAMIC CHIP	0.1uF	10%	16V
C512	1-107-826-11	CERAMIC CHIP	0.1uF	10%	16V
C513	1-107-826-11	CERAMIC CHIP	0.1uF	10%	16V
C514	1-115-467-11	CERAMIC CHIP	0.22uF	10%	10V
C515	1-164-360-11	CERAMIC CHIP	0.1uF		16V
C516	1-115-467-11	CERAMIC CHIP	0.22uF	10%	10V
C601	1-107-726-91	CERAMIC CHIP	0.01uF	10%	16V
C602	1-107-726-91	CERAMIC CHIP	0.01uF	10%	16V
C603	1-107-726-91	CERAMIC CHIP	0.01uF	10%	16V

Ref. No.	Part No.	Description			Remark
C604	1-107-726-91	CERAMIC CHIP	0.01uF	10%	16V
C605	1-162-917-11	CERAMIC CHIP	15PF	5%	50V
C606	1-162-917-11	CERAMIC CHIP	15PF	5%	50V
C607	1-107-726-91	CERAMIC CHIP	0.01uF	10%	16V
C608	1-107-726-91	CERAMIC CHIP	0.01uF	10%	16V
C609	1-107-726-91	CERAMIC CHIP	0.01uF	10%	16V
C610	1-107-726-91	CERAMIC CHIP	0.01uF	10%	16V
C611	1-107-726-91	CERAMIC CHIP	0.01uF	10%	16V
C612	1-107-726-91	CERAMIC CHIP	0.01uF	10%	16V
C613	1-107-726-91	CERAMIC CHIP	0.01uF	10%	16V
C614	1-107-726-91	CERAMIC CHIP	0.01uF	10%	16V
C615	1-107-726-91	CERAMIC CHIP	0.01uF	10%	16V
C616	1-107-726-91	CERAMIC CHIP	0.01uF	10%	16V
C617	1-124-778-00	ELECT CHIP	22uF	20%	6.3V
C618	1-126-246-11	ELECT CHIP	220uF	20%	4V
C620	1-165-112-11	CERAMIC CHIP	0.33uF		16V
C621	1-162-964-11	CERAMIC CHIP	0.001uF	10%	50V
C651	1-126-193-11	ELECT CHIP	1uF	20%	50V
C652	1-126-193-11	ELECT CHIP	1uF	20%	50V
C653	1-107-726-91	CERAMIC CHIP	0.01uF	10%	16V
C654	1-107-726-91	CERAMIC CHIP	0.01uF	10%	16V
C655	1-124-779-00	ELECT CHIP	10uF	20%	16V
C656	1-107-826-11	CERAMIC CHIP	0.1uF	10%	16V
C657	1-124-779-00	ELECT CHIP	10uF	20%	16V
C658	1-107-826-11	CERAMIC CHIP	0.1uF	10%	16V
C659	1-126-204-11	ELECT CHIP	47uF	20%	16V
C660	1-107-826-11	CERAMIC CHIP	0.1uF	10%	16V
C661	1-162-964-11	CERAMIC CHIP	0.001uF	10%	50V
C663	1-107-826-11	CERAMIC CHIP	0.1uF	10%	16V
C675	1-126-395-11	ELECT CHIP	22uF	20%	16V
C676	1-126-395-11	ELECT CHIP	22uF	20%	16V
C677	1-126-395-11	ELECT CHIP	22uF	20%	16V
C678	1-126-395-11	ELECT CHIP	22uF	20%	16V
C679	1-126-395-11	ELECT CHIP	22uF	20%	16V
C680	1-126-395-11	ELECT CHIP	22uF	20%	16V
C681	1-117-681-11	ELECT CHIP	100uF	20%	16V
C682	1-164-360-11	CERAMIC CHIP	0.1uF		16V
C683	1-124-779-00	ELECT CHIP	10uF	20%	16V
C684	1-124-779-00	ELECT CHIP	10uF	20%	16V
C685	1-126-395-11	ELECT CHIP	22uF	20%	16V
C686	1-164-156-11	CERAMIC CHIP	0.1uF		25V
C689	1-164-156-11	CERAMIC CHIP	0.1uF		25V
C690	1-117-681-11	ELECT CHIP	100uF	20%	16V
C691	1-126-204-11	ELECT CHIP	47uF	20%	16V
C692	1-107-826-11	CERAMIC CHIP	0.1uF	10%	16V
C693	1-107-826-11	CERAMIC CHIP	0.1uF	10%	16V
C694	1-128-994-21	ELECT CHIP	47uF	20%	10V
C696	1-107-826-11	CERAMIC CHIP	0.1uF	10%	16V
C697	1-128-994-21	ELECT CHIP	47uF	20%	10V
C699	1-107-826-11	CERAMIC CHIP	0.1uF	10%	16V
C701	1-107-826-11	CERAMIC CHIP	0.1uF	10%	16V
C702	1-126-204-11	ELECT CHIP	47uF	20%	16V
C703	1-107-826-11	CERAMIC CHIP	0.1uF	10%	16V
C704	1-126-204-11	ELECT CHIP	47uF	20%	16V
C705	1-107-826-11	CERAMIC CHIP	0.1uF	10%	16V
C706	1-126-204-11	ELECT CHIP	47uF	20%	16V
C710	1-164-360-11	CERAMIC CHIP	0.1uF		16V
C711	1-164-360-11	CERAMIC CHIP	0.1uF		16V
C712	1-164-360-11	CERAMIC CHIP	0.1uF		16V
C713	1-164-360-11	CERAMIC CHIP	0.1uF		16V
C714	1-126-206-11	ELECT CHIP	100uF	20%	6.3V
C715	1-107-726-91	CERAMIC CHIP	0.01uF	10%	16V
C716	1-126-206-11	ELECT CHIP	100uF	20%	6.3V
C717	1-107-726-91	CERAMIC CHIP	0.01uF	10%	16V
C718	1-107-826-11	CERAMIC CHIP	0.1uF	10%	16V
C719	1-107-726-91	CERAMIC CHIP	0.01uF	10%	16V
C720	1-107-826-11	CERAMIC CHIP	0.1uF	10%	16V
C721	1-107-826-11	CERAMIC CHIP	0.1uF	10%	16V
C722	1-162-916-11	CERAMIC CHIP	12PF	5%	50V
C723	1-162-916-11	CERAMIC CHIP	12PF	5%	50V
C724	1-107-826-11	CERAMIC CHIP	0.1uF	10%	16V
C726	1-107-826-11	CERAMIC CHIP	0.1uF	10%	16V
C727	1-107-726-91	CERAMIC CHIP	0.01uF	10%	16V
C728	1-164-360-11	CERAMIC CHIP	0.1uF		16V
C729	1-164-360-11	CERAMIC CHIP	0.1uF		16V
C746	1-164-360-11	CERAMIC CHIP	0.1uF		16V
		< CONNECTOR >			
CN501	1-784-871-21	CONNECTOR, FFC (LIF (NON-ZIF)) 19P			
CN502	1-784-731-11	CONNECTOR, FFC 9P (US, CND, SP)			
CN502	1-568-854-11	CONNECTOR, FFC 11P (AEP, UK, RU)			
CN503	1-819-229-51	CONNECTOR, FFC/FPC 11P			
CN504	1-784-863-21	CONNECTOR, FFC (LIF (NON-ZIF)) 11P			
CN505	1-819-230-51	CONNECTOR, FFC/FPC 17P			
CN506	1-784-833-21	CONNECTOR, FFC (LIF (NON-ZIF)) 21P			
* CN507	1-564-729-11	PIN, CONNECTOR (SMALL TYPE) 13P			
CN508	1-564-721-11	PIN, CONNECTOR (SMALL TYPE) 5P			
		< DIODE >			
D11	8-719-083-67	DIODE UDZSTE-1720B			
D12	8-719-085-36	DIODE 11EQS04-TB5 (US, CND)			
D501	8-719-988-61	DIODE 1SS355TE-17			
D502	8-719-988-61	DIODE 1SS355TE-17			
D503	8-719-988-61	DIODE 1SS355TE-17			
D504	8-719-988-61	DIODE 1SS355TE-17			
		< EARTH TERMINAL >			
EP501	1-537-738-21	TERMINAL, GROUND			
		< JUMPER RESISTOR >			
FB501	1-216-864-11	SHORT CHIP	0		
FB502	1-216-864-11	SHORT CHIP	0		
FB503	1-216-864-11	SHORT CHIP	0		
FB504	1-216-864-11	SHORT CHIP	0		
FB505	1-216-864-11	SHORT CHIP	0		
FB506	1-216-864-11	SHORT CHIP	0		
FB507	1-216-864-11	SHORT CHIP	0		
FB508	1-216-864-11	SHORT CHIP	0		
FB509	1-216-864-11	SHORT CHIP	0		
FB510	1-216-864-11	SHORT CHIP	0		
FB512	1-216-864-11	SHORT CHIP	0		
FB513	1-216-864-11	SHORT CHIP	0		
FB514	1-216-864-11	SHORT CHIP	0		
FB515	1-216-864-11	SHORT CHIP	0		
FB516	1-216-864-11	SHORT CHIP	0		

Ref. No.	Part No.	Description		Remark
FB521	1-216-864-11	SHORT CHIP	0	
FB522	1-216-864-11	SHORT CHIP	0	
FB523	1-216-864-11	SHORT CHIP	0	
FB524	1-216-864-11	SHORT CHIP	0	
FB525	1-216-864-11	SHORT CHIP	0	
FB526	1-216-864-11	SHORT CHIP	0	
FB527	1-216-864-11	SHORT CHIP	0	
FB528	1-216-864-11	SHORT CHIP	0	
FB601	1-216-864-11	SHORT CHIP	0	
FB602	1-216-864-11	SHORT CHIP	0	
FB603	1-216-864-11	SHORT CHIP	0	
FB703	1-216-864-11	SHORT CHIP	0	
FB704	1-216-864-11	SHORT CHIP	0	
FB705	1-216-864-11	SHORT CHIP	0	
FB707	1-216-864-11	SHORT CHIP	0	
FB708	1-216-864-11	SHORT CHIP	0	
		< FILTER >		
FL701	1-234-177-21	FILTER, CHIP EMI		
FL702	1-234-177-21	FILTER, CHIP EMI		
FL703	1-234-177-21	FILTER, CHIP EMI		
FL704	1-234-177-21	FILTER, CHIP EMI		
FL705	1-234-177-21	FILTER, CHIP EMI		
FL708	1-234-177-21	FILTER, CHIP EMI		
FL709	1-234-177-21	FILTER, CHIP EMI		
FL710	1-234-177-21	FILTER, CHIP EMI		
FL711	1-234-177-21	FILTER, CHIP EMI		
		< IC >		
IC11	6-707-744-01	IC SI-3033KM-TL		
IC12	6-707-746-01	IC SI-3120KM-TL		
IC13	6-707-745-10	IC SI-3050KM-TL		
IC15	6-700-850-01	IC SI-8050JD-TP (US, CND)		
IC16	8-759-583-47	IC uPC2933T-E2 (US, CND)		
IC501	6-805-979-01	IC M30622MGP-A20FPU0		
IC502	6-701-680-01	IC PST3629NR		
IC503	6-600-466-01	IC TORX147L (VIDEO 1/SAT 1 DIGITAL IN OPTICAL)		
IC504	6-600-461-01	IC TOTX147L (DIGITAL OUT OPTICAL)		
IC505	8-759-825-15	IC LC89056W-E		
IC506	6-707-754-01	IC CXD9862R		
IC507	6-704-037-01	IC IC61LV6416-15TG		
IC509	8-759-236-19	IC TC74HC151AF (EL)		
IC510	8-759-233-64	IC TC74HCU04AF		
IC511	8-759-385-76	IC MC14052 BDR2		
IC512	8-759-710-97	IC NJM4565M-D		
IC513	6-707-608-01	IC PCM1803DBR		
IC514	8-759-549-07	IC SN74LV157APWR		
IC515	6-707-485-01	IC NJM2885DL1-18 (TE2)		
IC518	6-702-302-01	IC TK11133CSCL-G		
IC519	6-703-547-01	IC TA7805LS		
IC520	6-703-550-01	IC TA7809LS		
IC521	6-803-271-01	IC SN74LVC1G04DCKR		
		< JACK >		
J501	1-819-123-11	JACK, PIN (3P) (VIDEO 1/SAT 1/VIDEO 2/SAT 2/ TV DIGITAL IN COAXIAL)		

Ref. No.	Part No.	Description			Remark
		< JUMPER RESISTOR >			
JR591	1-216-864-11	SHORT CHIP	0		
		< COIL >			
L11	1-456-467-11	INDUCTOR	100uH (US, CND)		
L12	1-414-398-11	INDUCTOR	10uH (US, CND)		
L13	1-414-398-11	INDUCTOR	10uH (US, CND)		
L14	1-414-398-11	INDUCTOR	10uH (US, CND)		
L501	1-414-398-11	INDUCTOR	10uH		
L502	1-414-398-11	INDUCTOR	10uH		
L651	1-414-754-11	INDUCTOR	10uH		
L702	1-414-754-11	INDUCTOR	10uH		
		< TRANSISTOR >			
Q11	6-550-718-01	FET	RSR025N03TL		
Q502	8-729-120-28	TRANSISTOR	2SC1623-L5L6		
Q651	6-550-889-01	TRANSISTOR	2SC5938-T112-1B		
Q652	6-550-889-01	TRANSISTOR	2SC5938-T112-1B		
Q653	8-729-027-43	TRANSISTOR	DTC114EKA-T146		
Q654	8-729-027-43	TRANSISTOR	DTC114EKA-T146		
Q655	8-729-027-43	TRANSISTOR	DTC114EKA-T146		
Q656	8-729-027-23	TRANSISTOR	DTA114EKA-T146		
		< RESISTOR >			
R12	1-216-864-11	SHORT CHIP	0		
R14	1-216-864-11	SHORT CHIP	0		
R16	1-216-864-11	SHORT CHIP	0		
R17	1-216-821-11	METAL CHIP	1K	5%	1/10W
R18	1-216-841-11	METAL CHIP	47K	5%	1/10W
R19	1-216-824-11	METAL CHIP	1.8K	5%	1/10W (US, CND)
R20	1-216-808-11	METAL CHIP	82	5%	1/10W (US, CND)
R501	1-216-833-11	METAL CHIP	10K	5%	1/10W
R502	1-216-809-11	METAL CHIP	100	5%	1/10W
R503	1-216-809-11	METAL CHIP	100	5%	1/10W
R505	1-216-809-11	METAL CHIP	100	5%	1/10W
R506	1-216-809-11	METAL CHIP	100	5%	1/10W
R507	1-216-809-11	METAL CHIP	100	5%	1/10W
R508	1-216-809-11	METAL CHIP	100	5%	1/10W
R509	1-216-833-11	METAL CHIP	10K	5%	1/10W
R510	1-216-833-11	METAL CHIP	10K	5%	1/10W
R511	1-216-864-11	SHORT CHIP	0		
R512	1-216-833-11	METAL CHIP	10K	5%	1/10W
R513	1-216-821-11	METAL CHIP	1K	5%	1/10W
R516	1-216-841-11	METAL CHIP	47K	5%	1/10W
R517	1-216-809-11	METAL CHIP	100	5%	1/10W
R518	1-216-809-11	METAL CHIP	100	5%	1/10W
R519	1-216-809-11	METAL CHIP	100	5%	1/10W
R520	1-216-809-11	METAL CHIP	100	5%	1/10W
R521	1-216-809-11	METAL CHIP	100	5%	1/10W
R522	1-216-809-11	METAL CHIP	100	5%	1/10W
R523	1-216-809-11	METAL CHIP	100	5%	1/10W
R524	1-216-829-11	METAL CHIP	4.7K	5%	1/10W
R525	1-216-829-11	METAL CHIP	4.7K	5%	1/10W
R526	1-216-809-11	METAL CHIP	100	5%	1/10W

MAIN

Ref. No.	Part No.	Description			Remark
R527	1-216-809-11	METAL CHIP	100	5%	1/10W
R528	1-216-809-11	METAL CHIP	100	5%	1/10W
R529	1-216-809-11	METAL CHIP	100	5%	1/10W
R530	1-216-809-11	METAL CHIP	100	5%	1/10W
R531	1-216-809-11	METAL CHIP	100	5%	1/10W
R532	1-216-809-11	METAL CHIP	100	5%	1/10W
R533	1-216-841-11	METAL CHIP	47K	5%	1/10W
R534	1-216-809-11	METAL CHIP	100	5%	1/10W
R535	1-216-809-11	METAL CHIP	100	5%	1/10W
R536	1-216-809-11	METAL CHIP	100	5%	1/10W
R537	1-216-833-11	METAL CHIP	10K	5%	1/10W
R538	1-216-809-11	METAL CHIP	100	5%	1/10W
R539	1-216-841-11	METAL CHIP	47K	5%	1/10W
R540	1-216-809-11	METAL CHIP	100	5%	1/10W
R541	1-216-821-11	METAL CHIP	1K	5%	1/10W
R542	1-216-821-11	METAL CHIP	1K	5%	1/10W
R544	1-216-821-11	METAL CHIP	1K	5%	1/10W
R545	1-216-809-11	METAL CHIP	100	5%	1/10W
R546	1-216-809-11	METAL CHIP	100	5%	1/10W
R547	1-216-809-11	METAL CHIP	100	5%	1/10W
R548	1-216-809-11	METAL CHIP	100	5%	1/10W
R549	1-216-809-11	METAL CHIP	100	5%	1/10W
R551	1-216-833-11	METAL CHIP	10K	5%	1/10W (US, CND, SP)
R552	1-216-833-11	METAL CHIP	10K	5%	1/10W (US, CND, SP)
R555	1-216-833-11	METAL CHIP	10K	5%	1/10W
R557	1-216-833-11	METAL CHIP	10K	5%	1/10W
R558	1-216-809-11	METAL CHIP	100	5%	1/10W (AEP, UK, RU)
R559	1-216-809-11	METAL CHIP	100	5%	1/10W (AEP, UK, RU)
R560	1-216-809-11	METAL CHIP	100	5%	1/10W
R561	1-216-809-11	METAL CHIP	100	5%	1/10W
R562	1-216-809-11	METAL CHIP	100	5%	1/10W
R563	1-216-809-11	METAL CHIP	100	5%	1/10W
R564	1-216-821-11	METAL CHIP	1K	5%	1/10W
R565	1-216-809-11	METAL CHIP	100	5%	1/10W
R566	1-216-809-11	METAL CHIP	100	5%	1/10W
R567	1-216-809-11	METAL CHIP	100	5%	1/10W
R568	1-216-809-11	METAL CHIP	100	5%	1/10W
R569	1-216-809-11	METAL CHIP	100	5%	1/10W
R571	1-216-833-11	METAL CHIP	10K	5%	1/10W
R572	1-216-823-11	METAL CHIP	1.5K	5%	1/10W (RU)
R572	1-216-833-11	METAL CHIP	10K	5%	1/10W (AEP, UK)
R572	1-216-837-11	METAL CHIP	22K	5%	1/10W (US, CND)
R573	1-216-833-11	METAL CHIP	10K	5%	1/10W (SP)
R573	1-216-841-11	METAL CHIP	47K	5%	1/10W (US, CND, RU)
R574	1-216-833-11	METAL CHIP	10K	5%	1/10W (US, CND)
R575	1-216-833-11	METAL CHIP	10K	5%	1/10W (EXCEPT US, CND)
R577	1-216-809-11	METAL CHIP	100	5%	1/10W
R578	1-216-833-11	METAL CHIP	10K	5%	1/10W
R579	1-216-809-11	METAL CHIP	100	5%	1/10W
R580	1-216-833-11	METAL CHIP	10K	5%	1/10W
R581	1-216-833-11	METAL CHIP	10K	5%	1/10W
R582	1-216-809-11	METAL CHIP	100	5%	1/10W
R583	1-216-845-11	METAL CHIP	100K	5%	1/10W
R584	1-216-841-11	METAL CHIP	47K	5%	1/10W
R585	1-216-833-11	METAL CHIP	10K	5%	1/10W
R586	1-216-841-11	METAL CHIP	47K	5%	1/10W
R589	1-216-864-11	SHORT CHIP	0		
R591	1-216-809-11	METAL CHIP	100	5%	1/10W
R602	1-216-809-11	METAL CHIP	100	5%	1/10W
R603	1-216-857-11	METAL CHIP	1M	5%	1/10W
R604	1-216-821-11	METAL CHIP	1K	5%	1/10W
R605	1-216-809-11	METAL CHIP	100	5%	1/10W
R607	1-216-833-11	METAL CHIP	10K	5%	1/10W
R608	1-216-809-11	METAL CHIP	100	5%	1/10W
R609	1-216-809-11	METAL CHIP	100	5%	1/10W
R610	1-216-809-11	METAL CHIP	100	5%	1/10W
R611	1-216-809-11	METAL CHIP	100	5%	1/10W
R612	1-216-809-11	METAL CHIP	100	5%	1/10W
R613	1-216-809-11	METAL CHIP	100	5%	1/10W
R614	1-216-809-11	METAL CHIP	100	5%	1/10W
R615	1-216-809-11	METAL CHIP	100	5%	1/10W
R616	1-216-809-11	METAL CHIP	100	5%	1/10W
R617	1-216-809-11	METAL CHIP	100	5%	1/10W
R618	1-216-809-11	METAL CHIP	100	5%	1/10W
R619	1-216-809-11	METAL CHIP	100	5%	1/10W
R620	1-216-809-11	METAL CHIP	100	5%	1/10W
R621	1-216-809-11	METAL CHIP	100	5%	1/10W
R622	1-216-809-11	METAL CHIP	100	5%	1/10W
R623	1-216-809-11	METAL CHIP	100	5%	1/10W
R624	1-216-833-11	METAL CHIP	10K	5%	1/10W
R625	1-216-809-11	METAL CHIP	100	5%	1/10W
R626	1-216-809-11	METAL CHIP	100	5%	1/10W
R627	1-216-809-11	METAL CHIP	100	5%	1/10W
R628	1-216-809-11	METAL CHIP	100	5%	1/10W
R629	1-216-809-11	METAL CHIP	100	5%	1/10W
R630	1-216-809-11	METAL CHIP	100	5%	1/10W
R631	1-216-809-11	METAL CHIP	100	5%	1/10W
R632	1-216-809-11	METAL CHIP	100	5%	1/10W
R633	1-216-809-11	METAL CHIP	100	5%	1/10W
R634	1-216-809-11	METAL CHIP	100	5%	1/10W
R635	1-216-809-11	METAL CHIP	100	5%	1/10W
R636	1-216-809-11	METAL CHIP	100	5%	1/10W
R637	1-216-809-11	METAL CHIP	100	5%	1/10W
R638	1-216-809-11	METAL CHIP	100	5%	1/10W
R639	1-216-809-11	METAL CHIP	100	5%	1/10W
R640	1-216-833-11	METAL CHIP	10K	5%	1/10W
R641	1-216-833-11	METAL CHIP	10K	5%	1/10W
R642	1-216-833-11	METAL CHIP	10K	5%	1/10W
R643	1-216-833-11	METAL CHIP	10K	5%	1/10W
R644	1-216-821-11	METAL CHIP	1K	5%	1/10W
R645	1-216-821-11	METAL CHIP	1K	5%	1/10W
R646	1-216-833-11	METAL CHIP	10K	5%	1/10W
R647	1-216-845-11	METAL CHIP	100K	5%	1/10W
R648	1-216-829-11	METAL CHIP	4.7K	5%	1/10W
R651	1-216-809-11	METAL CHIP	100	5%	1/10W
R652	1-216-809-11	METAL CHIP	100	5%	1/10W

Ref. No.	Part No.	Description			Remark
R653	1-216-809-11	METAL CHIP	100	5%	1/10W
R654	1-216-809-11	METAL CHIP	100	5%	1/10W
R655	1-216-809-11	METAL CHIP	100	5%	1/10W
R656	1-216-809-11	METAL CHIP	100	5%	1/10W
R657	1-216-864-11	SHORT CHIP	0		
R658	1-216-864-11	SHORT CHIP	0		
R659	1-216-864-11	SHORT CHIP	0		
R660	1-216-864-11	SHORT CHIP	0		
R661	1-216-864-11	SHORT CHIP	0		
R662	1-216-864-11	SHORT CHIP	0		
R673	1-216-833-11	METAL CHIP	10K	5%	1/10W
R674	1-216-833-11	METAL CHIP	10K	5%	1/10W
R675	1-216-833-11	METAL CHIP	10K	5%	1/10W
R676	1-216-833-11	METAL CHIP	10K	5%	1/10W
R677	1-216-833-11	METAL CHIP	10K	5%	1/10W
R678	1-216-833-11	METAL CHIP	10K	5%	1/10W
R679	1-216-833-11	METAL CHIP	10K	5%	1/10W (AEP, UK, RU)
R679	1-216-845-11	METAL CHIP	100K	5%	1/10W (US, CND, SP)
R680	1-216-833-11	METAL CHIP	10K	5%	1/10W (AEP, UK, RU)
R680	1-216-845-11	METAL CHIP	100K	5%	1/10W (US, CND, SP)
R681	1-216-833-11	METAL CHIP	10K	5%	1/10W
R682	1-216-833-11	METAL CHIP	10K	5%	1/10W
R683	1-216-833-11	METAL CHIP	10K	5%	1/10W (AEP, UK, RU)
R683	1-216-845-11	METAL CHIP	100K	5%	1/10W (US, CND, SP)
R684	1-216-833-11	METAL CHIP	10K	5%	1/10W (AEP, UK, RU)
R684	1-216-845-11	METAL CHIP	100K	5%	1/10W (US, CND, SP)
R685	1-216-833-11	METAL CHIP	10K	5%	1/10W
R686	1-216-833-11	METAL CHIP	10K	5%	1/10W
R687	1-216-833-11	METAL CHIP	10K	5%	1/10W
R688	1-216-833-11	METAL CHIP	10K	5%	1/10W
R689	1-216-829-11	METAL CHIP	4.7K	5%	1/10W
R690	1-216-829-11	METAL CHIP	4.7K	5%	1/10W
R691	1-216-841-11	METAL CHIP	47K	5%	1/10W
R692	1-216-841-11	METAL CHIP	47K	5%	1/10W
R693	1-216-825-11	METAL CHIP	2.2K	5%	1/10W
R694	1-216-817-11	METAL CHIP	470	5%	1/10W
R695	1-216-825-11	METAL CHIP	2.2K	5%	1/10W
R696	1-216-817-11	METAL CHIP	470	5%	1/10W
R697	1-216-864-11	SHORT CHIP	0		
R698	1-216-864-11	SHORT CHIP	0		
R699	1-216-864-11	SHORT CHIP	0		
R700	1-216-864-11	SHORT CHIP	0		
R701	1-218-285-11	METAL CHIP	75	5%	1/10W
R702	1-218-285-11	METAL CHIP	75	5%	1/10W
R703	1-218-285-11	METAL CHIP	75	5%	1/10W
R704	1-216-817-11	METAL CHIP	470	5%	1/10W
R705	1-216-817-11	METAL CHIP	470	5%	1/10W
R706	1-216-817-11	METAL CHIP	470	5%	1/10W
R707	1-216-853-11	METAL CHIP	470K	5%	1/10W
R708	1-216-853-11	METAL CHIP	470K	5%	1/10W
R709	1-216-853-11	METAL CHIP	470K	5%	1/10W
R710	1-216-841-11	METAL CHIP	47K	5%	1/10W
R711	1-216-841-11	METAL CHIP	47K	5%	1/10W
R712	1-216-841-11	METAL CHIP	47K	5%	1/10W
R713	1-216-809-11	METAL CHIP	100	5%	1/10W
R714	1-216-809-11	METAL CHIP	100	5%	1/10W
R715	1-216-809-11	METAL CHIP	100	5%	1/10W
R716	1-216-833-11	METAL CHIP	10K	5%	1/10W
R717	1-216-809-11	METAL CHIP	100	5%	1/10W
R718	1-216-864-11	SHORT CHIP	0		
R719	1-216-809-11	METAL CHIP	100	5%	1/10W
R720	1-216-809-11	METAL CHIP	100	5%	1/10W
R721	1-216-830-11	METAL CHIP	5.6K	5%	1/10W
R722	1-216-829-11	METAL CHIP	4.7K	5%	1/10W
R723	1-216-839-11	METAL CHIP	33K	5%	1/10W
R724	1-216-809-11	METAL CHIP	100	5%	1/10W
R725	1-216-809-11	METAL CHIP	100	5%	1/10W
R726	1-216-809-11	METAL CHIP	100	5%	1/10W
R727	1-216-809-11	METAL CHIP	100	5%	1/10W
R728	1-216-809-11	METAL CHIP	100	5%	1/10W
R729	1-216-809-11	METAL CHIP	100	5%	1/10W
R730	1-216-821-11	METAL CHIP	1K	5%	1/10W
R731	1-216-857-11	METAL CHIP	1M	5%	1/10W
R732	1-216-809-11	METAL CHIP	100	5%	1/10W
R733	1-216-833-11	METAL CHIP	10K	5%	1/10W
R734	1-216-827-11	METAL CHIP	3.3K	5%	1/10W
R735	1-216-809-11	METAL CHIP	100	5%	1/10W
R736	1-216-809-11	METAL CHIP	100	5%	1/10W
R737	1-216-809-11	METAL CHIP	100	5%	1/10W
R738	1-216-809-11	METAL CHIP	100	5%	1/10W
R739	1-216-809-11	METAL CHIP	100	5%	1/10W
R740	1-216-809-11	METAL CHIP	100	5%	1/10W
R741	1-216-809-11	METAL CHIP	100	5%	1/10W
R742	1-216-809-11	METAL CHIP	100	5%	1/10W
R743	1-216-809-11	METAL CHIP	100	5%	1/10W
R744	1-216-809-11	METAL CHIP	100	5%	1/10W
R745	1-216-809-11	METAL CHIP	100	5%	1/10W
R746	1-216-809-11	METAL CHIP	100	5%	1/10W
R747	1-216-809-11	METAL CHIP	100	5%	1/10W
R773	1-216-864-11	SHORT CHIP	0		
R774	1-216-864-11	SHORT CHIP	0		
R775	1-216-864-11	SHORT CHIP	0		
R776	1-216-833-11	METAL CHIP	10K	5%	1/10W
R777	1-216-833-11	METAL CHIP	10K	5%	1/10W
R778	1-216-864-11	SHORT CHIP	0		
R779	1-216-809-11	METAL CHIP	100	5%	1/10W
R780	1-216-864-11	SHORT CHIP	0		
R781	1-216-864-11	SHORT CHIP	0		
R782	1-216-864-11	SHORT CHIP	0		
R783	1-216-864-11	SHORT CHIP	0		
R784	1-216-864-11	SHORT CHIP	0		
R790	1-216-809-11	METAL CHIP	100	5%	1/10W
R791	1-216-841-11	METAL CHIP	47K	5%	1/10W
R799	1-216-809-11	METAL CHIP	100	5%	1/10W

< COMPOSITION CIRCUIT BLOCK >

RB601	1-233-576-11	RES, CHIP NETWORK	100 (3216)
RB602	1-233-576-11	RES, CHIP NETWORK	100 (3216)
RB603	1-233-576-11	RES, CHIP NETWORK	100 (3216)

Ref. No.	Part No.	Description			Remark
RB604	1-233-576-11	RES, CHIP NETWORK	100 (3216)		
RB605	1-233-576-11	RES, CHIP NETWORK	100 (3216)		
RB606	1-233-576-11	RES, CHIP NETWORK	100 (3216)		
RB607	1-233-576-11	RES, CHIP NETWORK	100 (3216)		
		< SWITCH >			
S501	1-771-692-11	SWITCH, SLIDE (DIGITAL INPUT SELECTOR)			
		< VIBRATOR >			
X501	1-795-058-21	VIBRATOR, CERAMIC (5MHz)			
X601	1-813-325-11	VIBRATOR, CRYSTAL (13.9MHz)			
X701	1-781-465-21	VIBRATOR, CRYSTAL (12.288MHz)			

****

◊	A-1124-106-A	MIB01 BOARD, COMPLETE (for SERVICE)			(US, CND)
		**********			
		< CAPACITOR/JUMPER RESISTOR >			
C501	1-127-715-11	CERAMIC CHIP	0.22uF	10%	16V
C502	1-162-970-11	CERAMIC CHIP	0.01uF	10%	25V
C503	1-127-715-11	CERAMIC CHIP	0.22uF	10%	16V
C504	1-162-964-11	CERAMIC CHIP	0.001uF	10%	50V
C505	1-126-205-11	ELECT CHIP	47uF	20%	6.3V
C506	1-107-826-11	CERAMIC CHIP	0.1uF	10%	16V
C507	1-162-970-11	CERAMIC CHIP	0.01uF	10%	25V
C508	1-126-205-11	ELECT CHIP	47uF	20%	6.3V
C512	1-126-205-11	ELECT CHIP	47uF	20%	6.3V
C513	1-107-826-11	CERAMIC CHIP	0.1uF	10%	16V
C516	1-162-970-11	CERAMIC CHIP	0.01uF	10%	25V
C517	1-162-970-11	CERAMIC CHIP	0.01uF	10%	25V
C518	1-107-826-11	CERAMIC CHIP	0.1uF	10%	16V
C519	1-107-826-11	CERAMIC CHIP	0.1uF	10%	16V
C520	1-107-826-11	CERAMIC CHIP	0.1uF	10%	16V
C523	1-162-970-11	CERAMIC CHIP	0.01uF	10%	25V
C524	1-107-826-11	CERAMIC CHIP	0.1uF	10%	16V
C525	1-126-205-11	ELECT CHIP	47uF	20%	6.3V
C526	1-162-970-11	CERAMIC CHIP	0.01uF	10%	25V
C527	1-125-838-11	CERAMIC CHIP	2.2uF	10%	6.3V
C528	1-162-970-11	CERAMIC CHIP	0.01uF	10%	25V
C529	1-127-715-11	CERAMIC CHIP	0.22uF	10%	16V
C530	1-107-826-11	CERAMIC CHIP	0.1uF	10%	16V
C531	1-107-826-11	CERAMIC CHIP	0.1uF	10%	16V
C532	1-126-205-11	ELECT CHIP	47uF	20%	6.3V
C533	1-112-180-21	ELECT CHIP	150uF	20%	4V
C534	1-126-205-11	ELECT CHIP	47uF	20%	6.3V
C535	1-127-715-11	CERAMIC CHIP	0.22uF	10%	16V
C536	1-107-826-11	CERAMIC CHIP	0.1uF	10%	16V
C539	1-107-826-11	CERAMIC CHIP	0.1uF	10%	16V
C540	1-107-826-11	CERAMIC CHIP	0.1uF	10%	16V
C541	1-128-934-11	CERAMIC CHIP	0.33uF	20%	10V
C542	1-107-826-11	CERAMIC CHIP	0.1uF	10%	16V
C543	1-164-677-11	CERAMIC CHIP	0.033uF	10%	16V
C544	1-107-826-11	CERAMIC CHIP	0.1uF	10%	16V
C545	1-107-826-11	CERAMIC CHIP	0.1uF	10%	16V
C546	1-164-173-11	CERAMIC CHIP	0.0039uF	10%	50V
C547	1-107-826-11	CERAMIC CHIP	0.1uF	10%	16V
C548	1-107-826-11	CERAMIC CHIP	0.1uF	10%	16V
C549	1-107-826-11	CERAMIC CHIP	0.1uF	10%	16V
C550	1-164-733-11	CERAMIC CHIP	820PF	10%	50V
C551	1-162-964-11	CERAMIC CHIP	0.001uF	10%	50V
C552	1-126-205-11	ELECT CHIP	47uF	20%	6.3V
C553	1-127-715-11	CERAMIC CHIP	0.22uF	10%	16V
C554	1-127-715-11	CERAMIC CHIP	0.22uF	10%	16V
C555	1-162-964-11	CERAMIC CHIP	0.001uF	10%	50V
C556	1-107-826-11	CERAMIC CHIP	0.1uF	10%	16V
C557	1-107-826-11	CERAMIC CHIP	0.1uF	10%	16V
C558	1-107-826-11	CERAMIC CHIP	0.1uF	10%	16V
C559	1-107-826-11	CERAMIC CHIP	0.1uF	10%	16V
C560	1-107-826-11	CERAMIC CHIP	0.1uF	10%	16V
C561	1-127-715-11	CERAMIC CHIP	0.22uF	10%	16V
C562	1-162-970-11	CERAMIC CHIP	0.01uF	10%	25V
C563	1-165-908-11	CERAMIC CHIP	1uF	10%	10V
C564	1-127-715-11	CERAMIC CHIP	0.22uF	10%	16V
C565	1-107-826-11	CERAMIC CHIP	0.1uF	10%	16V
C566	1-107-826-11	CERAMIC CHIP	0.1uF	10%	16V
C601	1-128-993-21	ELECT CHIP	22uF	20%	10V
C602	1-162-970-11	CERAMIC CHIP	0.01uF	10%	25V
C603	1-162-970-11	CERAMIC CHIP	0.01uF	10%	25V
C604	1-162-970-11	CERAMIC CHIP	0.01uF	10%	25V
C605	1-162-970-11	CERAMIC CHIP	0.01uF	10%	25V
C606	1-162-970-11	CERAMIC CHIP	0.01uF	10%	25V
C607	1-162-970-11	CERAMIC CHIP	0.01uF	10%	25V
C608	1-162-970-11	CERAMIC CHIP	0.01uF	10%	25V
C609	1-162-970-11	CERAMIC CHIP	0.01uF	10%	25V
C610	1-162-970-11	CERAMIC CHIP	0.01uF	10%	25V
C611	1-162-970-11	CERAMIC CHIP	0.01uF	10%	25V
C612	1-162-970-11	CERAMIC CHIP	0.01uF	10%	25V
C613	1-162-970-11	CERAMIC CHIP	0.01uF	10%	25V
C614	1-128-993-21	ELECT CHIP	22uF	20%	10V
C615	1-128-993-21	ELECT CHIP	22uF	20%	10V
C616	1-162-970-11	CERAMIC CHIP	0.01uF	10%	25V
C617	1-162-970-11	CERAMIC CHIP	0.01uF	10%	25V
C618	1-124-779-00	ELECT CHIP	10uF	20%	16V
C619	1-124-779-00	ELECT CHIP	10uF	20%	16V
C620	1-162-970-11	CERAMIC CHIP	0.01uF	10%	25V
C621	1-127-715-11	CERAMIC CHIP	0.22uF	10%	16V
C622	1-162-970-11	CERAMIC CHIP	0.01uF	10%	25V
C623	1-127-715-11	CERAMIC CHIP	0.22uF	10%	16V
C624	1-127-715-11	CERAMIC CHIP	0.22uF	10%	16V
C625	1-127-715-11	CERAMIC CHIP	0.22uF	10%	16V
C626	1-107-826-11	CERAMIC CHIP	0.1uF	10%	16V
C627	1-162-970-11	CERAMIC CHIP	0.01uF	10%	25V
C628	1-127-715-11	CERAMIC CHIP	0.22uF	10%	16V
C629	1-127-715-11	CERAMIC CHIP	0.22uF	10%	16V
C631	1-162-970-11	CERAMIC CHIP	0.01uF	10%	25V
C637	1-127-715-11	CERAMIC CHIP	0.22uF	10%	16V
C638	1-162-970-11	CERAMIC CHIP	0.01uF	10%	25V
C641	1-127-715-11	CERAMIC CHIP	0.22uF	10%	16V
C5101	1-117-370-11	CERAMIC CHIP	10uF		10V
C5102	1-117-681-11	ELECT CHIP	100uF	20%	16V
C5103	1-162-970-11	CERAMIC CHIP	0.01uF	10%	25V
C5104	1-117-370-11	CERAMIC CHIP	10uF		10V
C5105	1-117-681-11	ELECT CHIP	100uF	20%	16V
C5106	1-162-970-11	CERAMIC CHIP	0.01uF	10%	25V

◊ Please refer to "NOTE OF HANDLING THE MIB01 BOARD (Part No. A-1124-106-A)" on the service note (Page 6) for handling of this board.

Ref. No.	Part No.	Description			Remark
C5107	1-117-370-11	CERAMIC CHIP	10uF		10V
C5108	1-117-681-11	ELECT CHIP	100uF	20%	16V
C5109	1-162-970-11	CERAMIC CHIP	0.01uF	10%	25V
C5204	1-216-864-11	SHORT CHIP	0		
C5501	1-162-970-11	CERAMIC CHIP	0.01uF	10%	25V
C5502	1-117-370-11	CERAMIC CHIP	10uF		10V
C5504	1-216-864-11	SHORT CHIP	0		
		< CONNECTOR >			
CN601	1-818-086-41	HDMI CONNECTOR (HDMI OUT)			
CN5101	1-573-806-21	PIN, CONNECTOR (1.5mm) (SMD) 6P			
CN5201	1-779-330-51	CONNECTOR, FFC/FPC 12P			
CN5301	1-793-989-21	FFC/CONNECTOR, FPC (LIF (NON-ZIF)) 13P			
CN5401	1-779-338-51	CONNECTOR, FFC/FPC 28P			
		< FERRITE BEAD >			
FB5101	1-469-324-21	FERRITE, EMI (SMD) (2012)			
FB5102	1-469-324-21	FERRITE, EMI (SMD) (2012)			
FB5103	1-469-324-21	FERRITE, EMI (SMD) (2012)			
		< FILTER >			
FL601	1-234-177-21	FILTER, CHIP EMI			
FL602	1-234-177-21	FILTER, CHIP EMI			
FL603	1-234-177-21	FILTER, CHIP EMI			
FL604	1-234-177-21	FILTER, CHIP EMI			
FL605	1-234-177-21	FILTER, CHIP EMI			
FL5101	1-234-177-21	FILTER, CHIP EMI			
FL5102	1-234-177-21	FILTER, CHIP EMI			
FL5103	1-234-177-21	FILTER, CHIP EMI			
		< FET/IC >			
IC111	6-550-008-01	FET	UM6K1N-TN		
IC501	6-702-301-01	IC	TK11125CSCL-G		
IC503	6-706-521-01	IC	CXD9837R		
IC505	8-759-837-19	IC	MM1562FFBE		
IC506	6-701-079-01	IC	ADV7300AKST		
IC507	6-706-520-01	IC	CXD9836R		
IC508	6-702-301-01	IC	TK11125CSCL-G		
IC509	6-705-992-11	IC	HY57V161610ETP-7DR		
IC601	(Not supplied)	IC	MB89538APFM-G-663E1		
IC602	(Not supplied)	IC	SII9030CTU		
IC603	6-703-046-01	IC	SN74LVC1G08DCKR		
IC604	6-707-119-01	IC	TK11218CMCL-G		
IC605	6-705-338-01	IC	TK11250CMCL-G		
IC606	6-702-302-01	IC	TK11133CSCL-G		
IC607	6-704-470-01	IC	TK11233CMCL-G		
IC608	8-759-679-58	IC	SN74AHCT541PWR		
IC5401	6-703-589-01	IC	SN74LVC1G125DCKR		
		< LINE FILTER >			
* LF601	1-813-308-11	COMMON MODE CHOKE			
* LF602	1-813-308-11	COMMON MODE CHOKE			
* LF603	1-813-308-11	COMMON MODE CHOKE			
* LF604	1-813-308-11	COMMON MODE CHOKE			
		< FET >			
Q601	8-719-012-57	FET	UZ-2.0BS-TP		
Q602	8-719-012-57	FET	UZ-2.0BS-TP		

Ref. No.	Part No.	Description			Remark
		< RESISTOR >			
R501	1-216-809-11	METAL CHIP	100	5%	1/10W
R504	1-216-809-11	METAL CHIP	100	5%	1/10W
R509	1-216-805-11	METAL CHIP	47	5%	1/10W
R515	1-216-864-11	SHORT CHIP	0		
R516	1-216-864-11	SHORT CHIP	0		
R526	1-216-820-11	METAL CHIP	820	5%	1/10W
R527	1-216-827-11	METAL CHIP	3.3K	5%	1/10W
R532	1-216-819-11	METAL CHIP	680	5%	1/10W
R533	1-216-833-11	METAL CHIP	10K	5%	1/10W
R534	1-216-809-11	METAL CHIP	100	5%	1/10W
R535	1-216-821-11	METAL CHIP	1K	5%	1/10W
R536	1-216-821-11	METAL CHIP	1K	5%	1/10W
R537	1-216-809-11	METAL CHIP	100	5%	1/10W
R538	1-218-834-11	METAL CHIP	300	0.5%	1/10W
R539	1-218-834-11	METAL CHIP	300	0.5%	1/10W
R540	1-218-834-11	METAL CHIP	300	0.5%	1/10W
R541	1-218-834-11	METAL CHIP	300	0.5%	1/10W
R542	1-218-834-11	METAL CHIP	300	0.5%	1/10W
R543	1-218-834-11	METAL CHIP	300	0.5%	1/10W
R551	1-216-864-11	SHORT CHIP	0		
R559	1-216-864-11	SHORT CHIP	0		
R602	1-216-864-11	SHORT CHIP	0		
R603	1-216-864-11	SHORT CHIP	0		
R604	1-216-833-11	METAL CHIP	10K	5%	1/10W
R605	1-216-833-11	METAL CHIP	10K	5%	1/10W
R607	1-216-864-11	SHORT CHIP	0		
R608	1-216-864-11	SHORT CHIP	0		
R612	1-216-864-11	SHORT CHIP	0		
R615	1-216-821-11	METAL CHIP	1K	5%	1/10W
R617	1-216-821-11	METAL CHIP	1K	5%	1/10W
R624	1-216-821-11	METAL CHIP	1K	5%	1/10W
R625	1-216-805-11	METAL CHIP	47	5%	1/10W
R626	1-216-821-11	METAL CHIP	1K	5%	1/10W
R627	1-216-805-11	METAL CHIP	47	5%	1/10W
R628	1-216-824-11	METAL CHIP	1.8K	5%	1/10W
R629	1-216-821-11	METAL CHIP	1K	5%	1/10W
R630	1-216-824-11	METAL CHIP	1.8K	5%	1/10W
R631	1-216-824-11	METAL CHIP	1.8K	5%	1/10W
R632	1-216-824-11	METAL CHIP	1.8K	5%	1/10W
R633	1-216-824-11	METAL CHIP	1.8K	5%	1/10W
R638	1-216-813-11	METAL CHIP	220	5%	1/10W
R639	1-216-809-11	METAL CHIP	100	5%	1/10W
R640	1-216-813-11	METAL CHIP	220	5%	1/10W
R641	1-216-864-11	SHORT CHIP	0		
R648	1-216-829-11	METAL CHIP	4.7K	5%	1/10W
R654	1-216-829-11	METAL CHIP	4.7K	5%	1/10W
R655	1-216-829-11	METAL CHIP	4.7K	5%	1/10W
R659	1-216-864-11	SHORT CHIP	0		
R664	1-216-809-11	METAL CHIP	100	5%	1/10W
R665	1-216-829-11	METAL CHIP	4.7K	5%	1/10W
R666	1-216-829-11	METAL CHIP	4.7K	5%	1/10W
R667	1-216-829-11	METAL CHIP	4.7K	5%	1/10W
R668	1-216-864-11	SHORT CHIP	0		
R670	1-216-829-11	METAL CHIP	4.7K	5%	1/10W
R671	1-216-833-11	METAL CHIP	10K	5%	1/10W

Ref. No.	Part No.	Description			Remark
R672	1-216-864-11	SHORT CHIP	0		
R673	1-216-809-11	METAL CHIP	100	5%	1/10W
R674	1-216-829-11	METAL CHIP	4.7K	5%	1/10W
R675	1-218-840-11	METAL CHIP	510	0.5%	1/10W
R677	1-216-864-11	SHORT CHIP	0		
R679	1-216-864-11	SHORT CHIP	0		
R681	1-216-864-11	SHORT CHIP	0		
R682	1-216-840-11	METAL CHIP	39K	5%	1/10W
R684	1-216-829-11	METAL CHIP	4.7K	5%	1/10W
R687	1-216-824-11	METAL CHIP	1.8K	5%	1/10W
R689	1-216-824-11	METAL CHIP	1.8K	5%	1/10W
R690	1-216-864-11	SHORT CHIP	0		
R691	1-216-864-11	SHORT CHIP	0		
R692	1-216-864-11	SHORT CHIP	0		
R693	1-216-864-11	SHORT CHIP	0		
R694	1-216-864-11	SHORT CHIP	0		
R696	1-216-864-11	SHORT CHIP	0		
R1607	1-216-864-11	SHORT CHIP	0		
R1610	1-216-864-11	SHORT CHIP	0		
R1616	1-216-864-11	SHORT CHIP	0		
R1617	1-216-864-11	SHORT CHIP	0		
R1618	1-216-864-11	SHORT CHIP	0		
R1621	1-216-829-11	METAL CHIP	4.7K	5%	1/10W
R1623	1-216-864-11	SHORT CHIP	0		
R1633	1-216-821-11	METAL CHIP	1K	5%	1/10W
R1634	1-216-821-11	METAL CHIP	1K	5%	1/10W
R5001	1-216-864-11	SHORT CHIP	0		
R5002	1-216-817-11	METAL CHIP	470	5%	1/10W
R5003	1-216-817-11	METAL CHIP	470	5%	1/10W
R5101	1-216-833-11	METAL CHIP	10K	5%	1/10W
R5102	1-216-833-11	METAL CHIP	10K	5%	1/10W
R5202	1-216-864-11	SHORT CHIP	0		
R5204	1-216-809-11	METAL CHIP	100	5%	1/10W
R5206	1-216-864-11	SHORT CHIP	0		
R5207	1-216-864-11	SHORT CHIP	0		
R5208	1-216-864-11	SHORT CHIP	0		
R5209	1-216-864-11	SHORT CHIP	0		
R5210	1-216-864-11	SHORT CHIP	0		
R5211	1-216-864-11	SHORT CHIP	0		
R5303	1-216-864-11	SHORT CHIP	0		
R5305	1-216-864-11	SHORT CHIP	0		
R5307	1-216-864-11	SHORT CHIP	0		
R5309	1-216-864-11	SHORT CHIP	0		
R5311	1-216-864-11	SHORT CHIP	0		
R5313	1-216-864-11	SHORT CHIP	0		
R5402	1-216-864-11	SHORT CHIP	0		
R5403	1-216-864-11	SHORT CHIP	0		
R5404	1-216-864-11	SHORT CHIP	0		
R5405	1-216-864-11	SHORT CHIP	0		
R5406	1-216-864-11	SHORT CHIP	0		
R5407	1-216-864-11	SHORT CHIP	0		
R5408	1-216-864-11	SHORT CHIP	0		
R5409	1-216-864-11	SHORT CHIP	0		
R5411	1-216-864-11	SHORT CHIP	0		
R5412	1-216-864-11	SHORT CHIP	0		
R5414	1-216-864-11	SHORT CHIP	0		
R5415	1-216-864-11	SHORT CHIP	0		
R5416	1-216-864-11	SHORT CHIP	0		
R5417	1-216-864-11	SHORT CHIP	0		
R5418	1-216-864-11	SHORT CHIP	0		
R5419	1-216-864-11	SHORT CHIP	0		
R5420	1-216-864-11	SHORT CHIP	0		
R5421	1-216-864-11	SHORT CHIP	0		
R5423	1-216-809-11	METAL CHIP	100	5%	1/10W
R5452	1-216-829-11	METAL CHIP	4.7K	5%	1/10W
R5453	1-216-829-11	METAL CHIP	4.7K	5%	1/10W
R5504	1-216-819-11	METAL CHIP	680	5%	1/10W
R5505	1-216-819-11	METAL CHIP	680	5%	1/10W
R5524	1-216-819-11	METAL CHIP	680	5%	1/10W
R5525	1-216-819-11	METAL CHIP	680	5%	1/10W
R5526	1-216-819-11	METAL CHIP	680	5%	1/10W
R5527	1-216-819-11	METAL CHIP	680	5%	1/10W
R5528	1-216-819-11	METAL CHIP	680	5%	1/10W
R5529	1-216-819-11	METAL CHIP	680	5%	1/10W
R5530	1-216-819-11	METAL CHIP	680	5%	1/10W
R5531	1-216-819-11	METAL CHIP	680	5%	1/10W
R5534	1-216-819-11	METAL CHIP	680	5%	1/10W
R5535	1-216-819-11	METAL CHIP	680	5%	1/10W
R5536	1-216-819-11	METAL CHIP	680	5%	1/10W
R5537	1-216-819-11	METAL CHIP	680	5%	1/10W
R5538	1-216-819-11	METAL CHIP	680	5%	1/10W
R5539	1-216-819-11	METAL CHIP	680	5%	1/10W
R5540	1-216-819-11	METAL CHIP	680	5%	1/10W
R5541	1-216-819-11	METAL CHIP	680	5%	1/10W
R5544	1-216-864-11	SHORT CHIP	0		
R5545	1-216-864-11	SHORT CHIP	0		
R5546	1-216-864-11	SHORT CHIP	0		
R5547	1-216-864-11	SHORT CHIP	0		
R5548	1-216-864-11	SHORT CHIP	0		
R5549	1-216-864-11	SHORT CHIP	0		
R5550	1-216-864-11	SHORT CHIP	0		
R5551	1-216-864-11	SHORT CHIP	0		
		< COMPOSITION CIRCUIT BLOCK >			
RB5501	1-234-795-21	RES, NETWORK	0 (2010)		
RB5502	1-234-795-21	RES, NETWORK	0 (2010)		
		< VARIABLE RESISTOR >			
RV501	1-223-583-41	RES, ADJ, CARBON (3 TYPE) 1K			
RV502	1-223-583-41	RES, ADJ, CARBON (3 TYPE) 1K			
		< VIBRATOR >			
X601	1-813-430-11	PIEZOELECTRIC OSCILLATOR (8MHz)			

****

MS-203 BOARD
****

< CONNECTOR >

CN001	1-815-412-11	CONNECTOR, FFC/FPC 5P			

< SWITCH >

S001	1-786-693-11	SWITCH, DETECTION (DISC TRAY OPEN/CLOSE DETECT)			

****

POWER-AMP

Ref. No.	Part No.	Description			Remark
	A-1107-229-A	POWER-AMP BOARD, COMPLETE (US, CND)			
	A-1107-230-A	POWER-AMP BOARD, COMPLETE			(AEP, UK, RU, SP)
		**********			
	1-533-313-11	FUSE HOLDER			
	7-685-647-79	SCREW +BVTP 3X10 TYPE2 IT-3			
		< CAPACITOR/JUMPER RESISTOR >			
⚠C101	1-165-529-11	MYLAR	0.22uF	10	275V
⚠C102	1-117-916-51	FILM	0.22uF	10%	275V
⚠C103	1-112-330-11	ELECT (BLOCK)	1000uF	20%	200V (US, CND)
⚠C103	1-112-333-11	ELECT (BLOCK)	330uF	20%	450V (EXCEPT US, CND)
⚠C105	1-112-335-91	FILM	0.0033uF	5%	400V (EXCEPT US, CND)
⚠C105	1-136-203-11	MYLAR	0.01uF	10%	630V (US, CND)
⚠C106	1-117-619-31	FILM	1000PF	3%	1.2KV (EXCEPT US, CND)
⚠C106	1-117-623-11	FILM	1500PF	3%	1.2KV (US, CND)
⚠C107	1-162-964-11	CERAMIC CHIP	0.001uF	10%	50V (EXCEPT US, CND)
⚠C107	1-162-965-11	CERAMIC CHIP	0.0015uF	10%	50V (US, CND)
⚠C108	1-107-909-11	ELECT	47uF	20%	50V
⚠C109	1-162-960-11	CERAMIC CHIP	220PF	10%	50V
⚠C110	1-107-906-11	ELECT	10uF	20%	50V
⚠C111	1-162-968-11	CERAMIC CHIP	0.0047uF	10%	50V
⚠C112	1-117-699-11	CERAMIC	0.001uF	99%	250V (US, CND)
⚠C117	1-113-925-11	CERAMIC	0.01uF	20%	250V
⚠C118	1-113-925-11	CERAMIC	0.01uF	20%	250V
⚠C121	1-165-136-11	CERAMIC	3300PF	10%	500V
⚠C122	1-126-965-11	ELECT	22uF	20%	50V
⚠C123	1-162-968-11	CERAMIC CHIP	0.0047uF	10%	50V
⚠C124	1-126-961-11	ELECT	2.2uF	20%	50V
⚠C125	1-107-974-81	CERAMIC	47PF	5%	2KV
⚠C128	1-113-896-11	CERAMIC	220PF	10%	250V
⚠C129	1-115-339-11	CERAMIC CHIP	0.1uF	10%	50V
C132	1-100-924-21	ELECT	2200uF	20%	35V
C133	1-100-924-21	ELECT	2200uF	20%	35V
C134	1-100-924-21	ELECT	2200uF	20%	35V
C135	1-165-319-11	CERAMIC CHIP	0.1uF		50V
C136	1-165-319-11	CERAMIC CHIP	0.1uF		50V
C137	1-100-756-91	CERAMIC CHIP	0.047uF		50V
⚠C138	1-113-898-11	CERAMIC	330PF	10%	250V (US, CND)
⚠C138	1-117-698-51	CERAMIC	680PF	10%	250V (EXCEPT US, CND)
C139	1-131-692-11	FILM	0.1uF	5%	50V
C140	1-128-947-31	ELECT	3300uF	20%	10V
C141	1-128-954-21	ELECT	1000uF	20%	25V
C142	1-100-566-91	CERAMIC CHIP	0.1uF	10%	25V
C143	1-100-566-91	CERAMIC CHIP	0.1uF	10%	25V
C144	1-128-951-21	ELECT	2200uF	20%	16V
C145	1-100-566-91	CERAMIC CHIP	0.1uF	10%	25V
C146	1-128-950-21	ELECT	1000uF	20%	16V

Ref. No.	Part No.	Description			Remark
C147	1-100-566-91	CERAMIC CHIP	0.1uF	10%	25V
C152	1-100-756-91	CERAMIC CHIP	0.047uF		50V
C153	1-117-214-11	CERAMIC	0.001uF	10%	2KV
C161	1-126-963-11	ELECT	4.7uF	20%	50V (US, CND)
C161	1-126-964-11	ELECT	10uF	20%	50V (EXCEPT US, CND)
⚠C163	1-113-904-51	CERAMIC	1500PF	20%	250V (EXCEPT US, CND)
⚠C163	1-117-698-51	CERAMIC	680PF	10%	250V (US, CND)
⚠C164	1-113-904-51	CERAMIC	1500PF	20%	250V (EXCEPT US, CND)
⚠C164	1-117-698-51	CERAMIC	680PF	10%	250V (US, CND)
C165	1-126-967-11	ELECT	47uF	20%	50V
C166	1-126-967-11	ELECT	47uF	20%	50V
C167	1-126-967-11	ELECT	47uF	20%	50V
C168	1-126-967-11	ELECT	47uF	20%	50V
C201	1-107-682-11	CERAMIC CHIP	1uF	10%	16V
C202	1-162-964-11	CERAMIC CHIP	0.001uF	10%	50V
C203	1-126-933-11	ELECT	100uF	20%	16V
C204	1-162-970-11	CERAMIC CHIP	0.01uF	10%	25V
C205	1-126-934-11	ELECT	220uF	20%	16V
C206	1-164-156-11	CERAMIC CHIP	0.1uF		25V
C211	1-162-964-11	CERAMIC CHIP	0.001uF	10%	50V
C212	1-162-927-11	CERAMIC CHIP	100PF	5%	50V
C213	1-162-927-11	CERAMIC CHIP	100PF	5%	50V
C214	1-162-927-11	CERAMIC CHIP	100PF	5%	50V
C220	1-216-864-11	SHORT CHIP	0		
C223	1-216-864-11	SHORT CHIP	0		
C231	1-165-739-31	ELECT	56uF	20%	35V
C232	1-165-739-31	ELECT	56uF	20%	35V
C233	1-165-739-31	ELECT	56uF	20%	35V
C234	1-164-156-11	CERAMIC CHIP	0.1uF		25V
C235	1-164-156-11	CERAMIC CHIP	0.1uF		25V
C236	1-164-156-11	CERAMIC CHIP	0.1uF		25V
C237	1-164-156-11	CERAMIC CHIP	0.1uF		25V
C238	1-164-156-11	CERAMIC CHIP	0.1uF		25V
C239	1-164-156-11	CERAMIC CHIP	0.1uF		25V
C240	1-164-156-11	CERAMIC CHIP	0.1uF		25V
C241	1-164-156-11	CERAMIC CHIP	0.1uF		25V
C242	1-164-156-11	CERAMIC CHIP	0.1uF		25V
C243	1-164-156-11	CERAMIC CHIP	0.1uF		25V
C244	1-164-156-11	CERAMIC CHIP	0.1uF		25V
C245	1-164-156-11	CERAMIC CHIP	0.1uF		25V
C246	1-164-156-11	CERAMIC CHIP	0.1uF		25V
C247	1-164-156-11	CERAMIC CHIP	0.1uF		25V
C248	1-164-156-11	CERAMIC CHIP	0.1uF		25V
C249	1-164-156-11	CERAMIC CHIP	0.1uF		25V
C250	1-164-156-11	CERAMIC CHIP	0.1uF		25V
C251	1-164-156-11	CERAMIC CHIP	0.1uF		25V
C252	1-164-156-11	CERAMIC CHIP	0.1uF		25V
C253	1-164-156-11	CERAMIC CHIP	0.1uF		25V
C254	1-164-156-11	CERAMIC CHIP	0.1uF		25V
C255	1-164-156-11	CERAMIC CHIP	0.1uF		25V
C256	1-164-156-11	CERAMIC CHIP	0.1uF		25V
C257	1-164-156-11	CERAMIC CHIP	0.1uF		25V

POWER-AMP

Ref. No.	Part No.	Description			Remark
C258	1-164-156-11	CERAMIC CHIP	0.1uF		25V
C259	1-164-156-11	CERAMIC CHIP	0.1uF		25V
C260	1-164-156-11	CERAMIC CHIP	0.1uF		25V
C264	1-162-923-11	CERAMIC CHIP	47PF	5%	50V
C271	1-126-934-11	ELECT	220uF	20%	16V
C272	1-162-970-11	CERAMIC CHIP	0.01uF	10%	25V
C273	1-162-964-11	CERAMIC CHIP	0.001uF	10%	50V
C274	1-162-915-11	CERAMIC CHIP	10PF	0.5PF	50V
C275	1-162-910-11	CERAMIC CHIP	5PF	0.25PF	50V
C276	1-162-963-11	CERAMIC CHIP	680PF	10%	50V
C277	1-162-963-11	CERAMIC CHIP	680PF	10%	50V
C281	1-164-505-11	CERAMIC CHIP	2.2uF		16V
C282	1-164-505-11	CERAMIC CHIP	2.2uF		16V
C283	1-164-505-11	CERAMIC CHIP	2.2uF		16V
C284	1-164-505-11	CERAMIC CHIP	2.2uF		16V
C285	1-164-505-11	CERAMIC CHIP	2.2uF		16V
C286	1-164-505-11	CERAMIC CHIP	2.2uF		16V
C287	1-127-715-11	CERAMIC CHIP	0.22uF	10%	16V
C288	1-127-715-11	CERAMIC CHIP	0.22uF	10%	16V
C289	1-127-715-11	CERAMIC CHIP	0.22uF	10%	16V
C290	1-126-933-11	ELECT	100uF	20%	16V
C291	1-126-933-11	ELECT	100uF	20%	16V
C292	1-126-933-11	ELECT	100uF	20%	16V
C293	1-164-505-11	CERAMIC CHIP	2.2uF		16V
C294	1-164-505-11	CERAMIC CHIP	2.2uF		16V
C295	1-164-505-11	CERAMIC CHIP	2.2uF		16V
C296	1-164-505-11	CERAMIC CHIP	2.2uF		16V
C298	1-164-505-11	CERAMIC CHIP	2.2uF		16V
C299	1-164-505-11	CERAMIC CHIP	2.2uF		16V
C301	1-164-505-11	CERAMIC CHIP	2.2uF		16V
C302	1-164-505-11	CERAMIC CHIP	2.2uF		16V
C303	1-164-505-11	CERAMIC CHIP	2.2uF		16V
C304	1-164-156-11	CERAMIC CHIP	0.1uF		25V
C305	1-164-156-11	CERAMIC CHIP	0.1uF		25V
C306	1-164-156-11	CERAMIC CHIP	0.1uF		25V
C307	1-126-933-11	ELECT	100uF	20%	16V
C308	1-126-933-11	ELECT	100uF	20%	16V
C309	1-126-933-11	ELECT	100uF	20%	16V
C310	1-127-715-11	CERAMIC CHIP	0.22uF	10%	16V
C311	1-127-715-11	CERAMIC CHIP	0.22uF	10%	16V
C312	1-127-715-11	CERAMIC CHIP	0.22uF	10%	16V
C313	1-164-505-11	CERAMIC CHIP	2.2uF		16V
C314	1-164-505-11	CERAMIC CHIP	2.2uF		16V
C315	1-164-505-11	CERAMIC CHIP	2.2uF		16V
C316	1-164-505-11	CERAMIC CHIP	2.2uF		16V
C317	1-164-505-11	CERAMIC CHIP	2.2uF		16V
C318	1-164-505-11	CERAMIC CHIP	2.2uF		16V
C319	1-115-185-11	CERAMIC CHIP	0.033uF	10%	50V
C320	1-115-185-11	CERAMIC CHIP	0.033uF	10%	50V
C321	1-115-185-11	CERAMIC CHIP	0.033uF	10%	50V
C322	1-162-963-11	CERAMIC CHIP	680PF	10%	50V
C323	1-162-963-11	CERAMIC CHIP	680PF	10%	50V
C324	1-162-963-11	CERAMIC CHIP	680PF	10%	50V
C325	1-115-339-11	CERAMIC CHIP	0.1uF	10%	50V
C326	1-115-339-11	CERAMIC CHIP	0.1uF	10%	50V
C327	1-115-339-11	CERAMIC CHIP	0.1uF	10%	50V
C328	1-165-739-31	ELECT	56uF	20%	35V
C329	1-165-739-31	ELECT	56uF	20%	35V
C330	1-165-739-31	ELECT	56uF	20%	35V
C331	1-165-739-31	ELECT	56uF	20%	35V
C332	1-165-739-31	ELECT	56uF	20%	35V
C333	1-165-739-31	ELECT	56uF	20%	35V
C334	1-115-339-11	CERAMIC CHIP	0.1uF	10%	50V
C335	1-115-339-11	CERAMIC CHIP	0.1uF	10%	50V
C336	1-115-339-11	CERAMIC CHIP	0.1uF	10%	50V
C337	1-162-963-11	CERAMIC CHIP	680PF	10%	50V
C338	1-162-963-11	CERAMIC CHIP	680PF	10%	50V
C339	1-162-963-11	CERAMIC CHIP	680PF	10%	50V
C340	1-115-185-11	CERAMIC CHIP	0.033uF	10%	50V
C341	1-115-185-11	CERAMIC CHIP	0.033uF	10%	50V
C342	1-115-185-11	CERAMIC CHIP	0.033uF	10%	50V
C343	1-115-185-11	CERAMIC CHIP	0.033uF	10%	50V
C344	1-115-185-11	CERAMIC CHIP	0.033uF	10%	50V
C345	1-115-185-11	CERAMIC CHIP	0.033uF	10%	50V
C346	1-162-963-11	CERAMIC CHIP	680PF	10%	50V
C347	1-162-963-11	CERAMIC CHIP	680PF	10%	50V
C348	1-162-963-11	CERAMIC CHIP	680PF	10%	50V
C349	1-115-339-11	CERAMIC CHIP	0.1uF	10%	50V
C350	1-115-339-11	CERAMIC CHIP	0.1uF	10%	50V
C351	1-115-339-11	CERAMIC CHIP	0.1uF	10%	50V
C352	1-165-739-31	ELECT	56uF	20%	35V
C353	1-165-739-31	ELECT	56uF	20%	35V
C354	1-165-739-31	ELECT	56uF	20%	35V
C355	1-165-739-31	ELECT	56uF	20%	35V
C356	1-165-739-31	ELECT	56uF	20%	35V
C357	1-165-739-31	ELECT	56uF	20%	35V
C358	1-115-339-11	CERAMIC CHIP	0.1uF	10%	50V
C359	1-115-339-11	CERAMIC CHIP	0.1uF	10%	50V
C360	1-115-339-11	CERAMIC CHIP	0.1uF	10%	50V
C361	1-162-963-11	CERAMIC CHIP	680PF	10%	50V
C362	1-162-963-11	CERAMIC CHIP	680PF	10%	50V
C363	1-162-963-11	CERAMIC CHIP	680PF	10%	50V
C364	1-115-185-11	CERAMIC CHIP	0.033uF	10%	50V
C365	1-115-185-11	CERAMIC CHIP	0.033uF	10%	50V
C366	1-115-185-11	CERAMIC CHIP	0.033uF	10%	50V
C367	1-164-505-11	CERAMIC CHIP	2.2uF		16V
C368	1-164-505-11	CERAMIC CHIP	2.2uF		16V
C369	1-164-505-11	CERAMIC CHIP	2.2uF		16V
C370	1-165-729-31	ELECT	470uF	20%	16V
C371	1-162-963-11	CERAMIC CHIP	680PF	10%	50V
C372	1-162-963-11	CERAMIC CHIP	680PF	10%	50V
C373	1-162-963-11	CERAMIC CHIP	680PF	10%	50V
C374	1-162-963-11	CERAMIC CHIP	680PF	10%	50V
C375	1-162-963-11	CERAMIC CHIP	680PF	10%	50V
C376	1-162-963-11	CERAMIC CHIP	680PF	10%	50V
C377	1-162-963-11	CERAMIC CHIP	680PF	10%	50V
C378	1-162-963-11	CERAMIC CHIP	680PF	10%	50V
C379	1-162-963-11	CERAMIC CHIP	680PF	10%	50V
C380	1-162-963-11	CERAMIC CHIP	680PF	10%	50V
C381	1-131-704-11	FILM	1uF	5%	50V
C382	1-131-704-11	FILM	1uF	5%	50V
C383	1-131-704-11	FILM	1uF	5%	50V
C384	1-131-704-11	FILM	1uF	5%	50V
C385	1-131-704-11	FILM	1uF	5%	50V
C386	1-131-704-11	FILM	1uF	5%	50V

Ref. No.	Part No.	Description			Remark
C387	1-131-704-11	FILM	1uF	5%	50V
C388	1-131-704-11	FILM	1uF	5%	50V
C389	1-131-704-11	FILM	1uF	5%	50V
C390	1-131-704-11	FILM	1uF	5%	50V
C391	1-131-704-11	FILM	1uF	5%	50V
C392	1-131-704-11	FILM	1uF	5%	50V
C393	1-107-898-11	ELECT	2200uF	20%	35V
C394	1-107-898-11	ELECT	2200uF	20%	35V
C395	1-107-898-11	ELECT	2200uF	20%	35V
C396	1-107-898-11	ELECT	2200uF	20%	35V
C397	1-107-898-11	ELECT	2200uF	20%	35V
C398	1-107-898-11	ELECT	2200uF	20%	35V
C411	1-162-966-11	CERAMIC CHIP	0.0022uF	10%	50V
C412	1-162-966-11	CERAMIC CHIP	0.0022uF	10%	50V
C413	1-162-966-11	CERAMIC CHIP	0.0022uF	10%	50V
C414	1-162-966-11	CERAMIC CHIP	0.0022uF	10%	50V
C415	1-162-966-11	CERAMIC CHIP	0.0022uF	10%	50V
C416	1-162-966-11	CERAMIC CHIP	0.0022uF	10%	50V
C417	1-162-966-11	CERAMIC CHIP	0.0022uF	10%	50V
C418	1-162-966-11	CERAMIC CHIP	0.0022uF	10%	50V
C419	1-162-966-11	CERAMIC CHIP	0.0022uF	10%	50V
C420	1-162-966-11	CERAMIC CHIP	0.0022uF	10%	50V
C421	1-162-966-11	CERAMIC CHIP	0.0022uF	10%	50V
C422	1-162-966-11	CERAMIC CHIP	0.0022uF	10%	50V
C423	1-162-966-11	CERAMIC CHIP	0.0022uF	10%	50V
C424	1-162-966-11	CERAMIC CHIP	0.0022uF	10%	50V
C425	1-162-966-11	CERAMIC CHIP	0.0022uF	10%	50V
C426	1-162-966-11	CERAMIC CHIP	0.0022uF	10%	50V
C427	1-162-966-11	CERAMIC CHIP	0.0022uF	10%	50V
C428	1-162-966-11	CERAMIC CHIP	0.0022uF	10%	50V
C429	1-162-966-11	CERAMIC CHIP	0.0022uF	10%	50V
C430	1-162-966-11	CERAMIC CHIP	0.0022uF	10%	50V
C431	1-162-966-11	CERAMIC CHIP	0.0022uF	10%	50V
C432	1-162-966-11	CERAMIC CHIP	0.0022uF	10%	50V
C433	1-162-966-11	CERAMIC CHIP	0.0022uF	10%	50V
C434	1-162-966-11	CERAMIC CHIP	0.0022uF	10%	50V
C441	1-164-505-11	CERAMIC CHIP	2.2uF		16V
C442	1-164-505-11	CERAMIC CHIP	2.2uF		16V
C443	1-117-370-11	CERAMIC CHIP	10uF		10V
C444	1-164-505-11	CERAMIC CHIP	2.2uF		16V
C445	1-164-505-11	CERAMIC CHIP	2.2uF		16V
C446	1-117-370-11	CERAMIC CHIP	10uF		10V
C447	1-126-947-11	ELECT	47uF	20%	35V
C448	1-164-505-11	CERAMIC CHIP	2.2uF		16V
C451	1-126-964-11	ELECT	10uF	20%	50V
C452	1-126-960-11	ELECT	1uF	20%	50V
C453	1-126-947-11	ELECT	47uF	20%	35V
C454	1-126-933-11	ELECT	100uF	20%	16V
C455	1-100-566-91	CERAMIC CHIP	0.1uF	10%	25V
C461	1-163-009-11	CERAMIC CHIP	0.001uF	10%	50V
C462	1-163-009-11	CERAMIC CHIP	0.001uF	10%	50V
C463	1-163-009-11	CERAMIC CHIP	0.001uF	10%	50V
C464	1-163-009-11	CERAMIC CHIP	0.001uF	10%	50V
C465	1-163-009-11	CERAMIC CHIP	0.001uF	10%	50V
C466	1-163-009-11	CERAMIC CHIP	0.001uF	10%	50V
C467	1-163-009-11	CERAMIC CHIP	0.001uF	10%	50V
C468	1-163-009-11	CERAMIC CHIP	0.001uF	10%	50V
C469	1-163-009-11	CERAMIC CHIP	0.001uF	10%	50V
C470	1-163-009-11	CERAMIC CHIP	0.001uF	10%	50V
C471	1-163-009-11	CERAMIC CHIP	0.001uF	10%	50V
C472	1-163-009-11	CERAMIC CHIP	0.001uF	10%	50V
		< CONNECTOR >			
CN101	1-564-321-00	PIN, CONNECTOR (3.96mm PITCH) 2P			
CN300	1-750-889-11	CONNECTOR, D-SUB (ANGLE TYPE) 15P			(SPEAKER)
CN301	1-778-692-11	CONNECTOR, FFC/FPC 21P			
CN450	1-564-704-11	PIN, CONNECTOR (SMALL TYPE) 2P			
		< DIODE >			
⚠D101	8-719-082-57	DIODE	D5SBA60F01		
⚠D103	6-500-593-21	DIODE	10EDB60-TB5		
⚠D104	6-500-593-21	DIODE	10EDB60-TB5		
⚠D105	8-719-063-73	DIODE	D1NL20U-TR		
⚠D106	8-719-988-61	DIODE	1SS355TE-17		
⚠D107	8-719-988-61	DIODE	1SS355TE-17		
⚠D108	8-719-988-61	DIODE	1SS355TE-17		
⚠D109	8-719-988-61	DIODE	1SS355TE-17		
⚠D110	8-719-988-61	DIODE	1SS355TE-17		
⚠D113	6-500-241-01	DIODE	SARS03		
⚠D114	8-719-988-61	DIODE	1SS355TE-17		
⚠D115	8-719-977-28	DIODE	DTZ10B		
⚠D121	8-719-948-45	DIODE	ERA22-08		
⚠D122	8-719-063-73	DIODE	D1NL20U-TR		
⚠D123	8-719-977-28	DIODE	DTZ10B		
⚠D124	8-719-083-69	DIODE	UDZSTE-1724B		
⚠D125	8-719-069-54	DIODE	UDZSTE-175.1B		
⚠D127	8-719-977-28	DIODE	DTZ10B		
D131	8-719-076-60	DIODE	FCH20A15		
D132	8-719-069-54	DIODE	UDZSTE-175.1B		
D141	8-719-063-73	DIODE	D1NL20U-TR		
D142	8-719-080-53	DIODE	RK36LF-B3		
D143	8-719-080-53	DIODE	RK36LF-B3		
D144	6-500-288-11	DIODE	EK19LF-F7		
D301	6-500-260-01	DIODE	P6SMB39AT3		
D302	6-500-260-01	DIODE	P6SMB39AT3		
D303	6-500-260-01	DIODE	P6SMB39AT3		
D304	6-500-260-01	DIODE	P6SMB39AT3		
D305	6-500-260-01	DIODE	P6SMB39AT3		
D306	6-500-260-01	DIODE	P6SMB39AT3		
D307	6-500-260-01	DIODE	P6SMB39AT3		
D308	6-500-260-01	DIODE	P6SMB39AT3		
D309	6-500-260-01	DIODE	P6SMB39AT3		
D310	6-500-260-01	DIODE	P6SMB39AT3		
D311	6-500-260-01	DIODE	P6SMB39AT3		
D312	6-500-260-01	DIODE	P6SMB39AT3		
D451	8-719-988-61	DIODE	1SS355TE-17		
D452	8-719-988-61	DIODE	1SS355TE-17		
		< EARTH TERMINAL >			
EP101	1-537-738-21	TERMINAL, GROUND			
EP102	1-537-738-21	TERMINAL, GROUND			
EP104	1-537-738-21	TERMINAL, GROUND			
EP201	1-537-738-21	TERMINAL, GROUND			
EP204	1-537-738-21	TERMINAL, GROUND			

POWER-AMP

Ref. No.	Part No.	Description	Remark
		< FERRITE BEAD >	
⚠FB105	1-410-396-71	FERRITE 0.45uH	
FB271	1-469-760-21	FERRITE, EMI (SMD) (2012)	
		< FILTER >	
FL201	1-234-177-21	FILTER, CHIP EMI	
		< IC >	
⚠IC101	6-707-741-01	IC STR-F6138-LF1352 (US, CND)	
⚠IC101	6-707-742-11	IC STR-F6168-LF1352 (EXCEPT US, CND)	
⚠IC121	6-707-740-01	IC STR-V153	
IC131	8-759-648-34	IC TA76431AS (TPE6)	
IC151	6-707-743-01	IC TA76L431S (TPE6, Q)	
IC201	6-702-300-01	IC TK11118CSCL-G	
IC231	6-705-979-01	IC CXD9788AR	
IC232	6-705-979-01	IC CXD9788AR	
IC233	6-705-979-01	IC CXD9788AR	
IC271	8-759-649-50	IC SN74AHC1GU04DCKR	
IC301	6-707-629-01	IC CXD9845M	
IC302	6-707-629-01	IC CXD9845M	
IC303	6-707-629-01	IC CXD9845M	
		< COIL >	
L131	1-457-058-11	INDUCTOR 10.8uH	
L142	1-414-398-11	INDUCTOR 10uH	
L145	1-414-398-11	INDUCTOR 10uH	
L147	1-414-398-11	INDUCTOR 10uH	
L148	1-414-398-11	INDUCTOR 10uH	
L151	1-414-398-11	INDUCTOR 10uH	
L152	1-414-398-11	INDUCTOR 10uH	
L231	1-414-754-11	INDUCTOR 10uH	
L271	1-414-754-11	INDUCTOR 10uH	
L272	1-412-939-11	INDUCTOR 1uH	
L301	1-456-680-11	INDUCTOR 10uH	
L302	1-456-680-11	INDUCTOR 10uH	
L303	1-456-680-11	INDUCTOR 10uH	
L304	1-456-680-11	INDUCTOR 10uH	
L305	1-456-680-11	INDUCTOR 10uH	
L306	1-456-680-11	INDUCTOR 10uH	
L307	1-456-680-11	INDUCTOR 10uH	
L308	1-456-680-11	INDUCTOR 10uH	
L309	1-456-680-11	INDUCTOR 10uH	
L310	1-456-680-11	INDUCTOR 10uH	
L311	1-456-680-11	INDUCTOR 10uH	
L312	1-456-680-11	INDUCTOR 10uH	
L451	1-414-398-11	INDUCTOR 10uH	
L461	1-457-078-11	AIR-CORE COIL	
L462	1-457-077-11	AIR-CORE COIL	
L463	1-457-078-11	AIR-CORE COIL	
L464	1-457-077-11	AIR-CORE COIL	
L465	1-457-078-11	AIR-CORE COIL	
L466	1-457-077-11	AIR-CORE COIL	
L467	1-457-078-11	AIR-CORE COIL	
L468	1-457-077-11	AIR-CORE COIL	
L469	1-457-078-11	AIR-CORE COIL	
L470	1-457-077-11	AIR-CORE COIL	
L471	1-457-078-11	AIR-CORE COIL	
L472	1-457-077-11	AIR-CORE COIL	
		< LINE FILTER >	
⚠LF101	1-457-054-11	LINE FILTER COIL (US, CND)	
⚠LF101	1-457-079-11	LINE FILTER COIL (EXCEPT US, CND)	
		< IC >	
⚠PC101	6-600-438-01	IC TLP421F (D4-GR)	
⚠PC102	6-600-438-01	IC TLP421F (D4-GR)	
⚠PC103	6-600-438-01	IC TLP421F (D4-GR)	
⚠PC104	6-600-438-01	IC TLP421F (D4-GR)	
		< TRANSISTOR >	
⚠Q101	8-729-140-04	TRANSISTOR 2SB1116A-L	
⚠Q121	8-729-142-51	TRANSISTOR 2SD1616A-TP-LK	
Q143	8-729-027-59	TRANSISTOR DTC144EKA-T146	
Q147	8-729-027-59	TRANSISTOR DTC144EKA-T146	
Q161	8-729-120-28	TRANSISTOR 2SC1623-L5L6	
Q162	8-729-120-28	TRANSISTOR 2SC1623-L5L6	
Q301	8-729-600-22	TRANSISTOR 2SA1235-F	
Q302	8-729-600-22	TRANSISTOR 2SA1235-F	
Q303	8-729-600-22	TRANSISTOR 2SA1235-F	
Q304	8-729-600-22	TRANSISTOR 2SA1235-F	
Q305	8-729-600-22	TRANSISTOR 2SA1235-F	
Q306	8-729-600-22	TRANSISTOR 2SA1235-F	
Q307	8-729-600-22	TRANSISTOR 2SA1235-F	
Q308	8-729-600-22	TRANSISTOR 2SA1235-F	
Q309	8-729-600-22	TRANSISTOR 2SA1235-F	
Q310	8-729-600-22	TRANSISTOR 2SA1235-F	
Q311	8-729-600-22	TRANSISTOR 2SA1235-F	
Q312	8-729-600-22	TRANSISTOR 2SA1235-F	
Q313	8-729-120-28	TRANSISTOR 2SC1623-L5L6	
Q451	8-729-120-28	TRANSISTOR 2SC1623-L5L6	
Q452	8-729-120-28	TRANSISTOR 2SC1623-L5L6	
Q453	8-729-142-48	TRANSISTOR 2SD1616-TP-LK	
		< RESISTOR >	
⚠R014	1-215-926-00	METAL OXIDE 33K 5% 3W F	(US, CND)
⚠R014	1-215-929-11	METAL OXIDE 100K 5% 3W F	(EXCEPT US, CND)
⚠R101	1-219-759-11	METAL 1M 5% 1/2W F	(EXCEPT US, CND)
⚠R102	1-219-237-11	SOLID 3.3M 20% 1/2W F	(US, CND)
⚠R103	1-215-926-00	METAL OXIDE 33K 5% 3W F	(US, CND)
⚠R103	1-215-929-11	METAL OXIDE 100K 5% 3W F	(EXCEPT US, CND)
⚠R105	1-216-797-11	METAL CHIP 10 5% 1/10W	
⚠R106	1-216-827-11	METAL CHIP 3.3K 5% 1/10W	
⚠R107	1-216-833-11	METAL CHIP 10K 5% 1/10W	
⚠R109	1-216-845-11	METAL CHIP 100K 5% 1/10W	
⚠R110	1-216-825-11	METAL CHIP 2.2K 5% 1/10W	
⚠R111	1-216-813-11	METAL CHIP 220 5% 1/10W	
⚠R112	1-216-361-61	METAL OXIDE 0.22 5% 2W F	(US, CND)

POWER-AMP

Ref. No.	Part No.	Description			Remark
⚠R113	1-216-361-61	METAL OXIDE	0.22	5%	2W F (US, CND)
⚠R113	1-216-363-00	METAL OXIDE	0.33	5%	2W F (EXCEPT US, CND)
⚠R114	1-214-789-00	METAL	0.1	10%	5W F (EXCEPT US, CND)
⚠R114	1-219-393-11	METAL	0.05	10%	5W F (US, CND)
⚠R115	1-247-895-00	CARBON	470K	5%	1/4W F
⚠R116	1-216-821-11	METAL CHIP	1K	5%	1/10W
⚠R118	1-216-864-11	SHORT CHIP	0		
⚠R119	1-216-836-11	METAL CHIP	18K	5%	1/10W
⚠R120	1-249-478-11	CARBON	2.2	5%	1/2W F
⚠R121	1-215-904-61	METAL OXIDE	100K	5%	2W F
⚠R122	1-216-793-11	METAL CHIP	4.7	5%	1/10W
⚠R123	1-216-829-11	METAL CHIP	4.7K	5%	1/10W
⚠R125	1-216-797-11	METAL CHIP	10	5%	1/10W
⚠R126	1-216-855-11	METAL CHIP	680K	5%	1/10W
⚠R127	1-216-347-11	METAL OXIDE	0.68	5%	1W F
R131	1-218-855-11	METAL CHIP	2.2K	0.5%	1/10W
R132	1-218-883-11	METAL CHIP	33K	0.5%	1/10W
R133	1-216-829-11	METAL CHIP	4.7K	5%	1/10W
R134	1-216-821-11	METAL CHIP	1K	5%	1/10W
R135	1-216-821-11	METAL CHIP	1K	5%	1/10W
R136	1-216-853-11	METAL CHIP	470K	5%	1/10W
R137	1-216-833-11	METAL CHIP	10K	5%	1/10W
R138	1-216-821-11	METAL CHIP	1K	5%	1/10W
R139	1-218-859-11	METAL CHIP	3.3K	0.5%	1/10W
R140	1-216-833-11	METAL CHIP	10K	5%	1/10W
R149	1-216-821-11	METAL CHIP	1K	5%	1/10W
R151	1-218-831-11	METAL CHIP	220	0.5%	1/10W
R152	1-218-855-11	METAL CHIP	2.2K	0.5%	1/10W
R153	1-218-861-11	METAL CHIP	3.9K	0.5%	1/10W
R154	1-216-837-11	METAL CHIP	22K	5%	1/10W
R155	1-216-817-11	METAL CHIP	470	5%	1/10W
R156	1-216-821-11	METAL CHIP	1K	5%	1/10W
R160	1-216-821-11	METAL CHIP	1K	5%	1/10W
R161	1-216-832-11	METAL CHIP	8.2K	5%	1/10W
R162	1-216-851-11	METAL CHIP	330K	5%	1/10W
⚠R165	1-216-198-00	RES-CHIP	1K	5%	1/8W
⚠R166	1-216-198-00	RES-CHIP	1K	5%	1/8W
⚠R167	1-216-198-00	RES-CHIP	1K	5%	1/8W
⚠R168	1-216-198-00	RES-CHIP	1K	5%	1/8W
R201	1-216-845-11	METAL CHIP	100K	5%	1/10W
R211	1-216-809-11	METAL CHIP	100	5%	1/10W
R212	1-216-809-11	METAL CHIP	100	5%	1/10W
R213	1-216-809-11	METAL CHIP	100	5%	1/10W
R214	1-216-809-11	METAL CHIP	100	5%	1/10W
R215	1-216-809-11	METAL CHIP	100	5%	1/10W
R216	1-216-809-11	METAL CHIP	100	5%	1/10W
R217	1-216-809-11	METAL CHIP	100	5%	1/10W
R218	1-216-809-11	METAL CHIP	100	5%	1/10W
R219	1-216-809-11	METAL CHIP	100	5%	1/10W
R220	1-216-809-11	METAL CHIP	100	5%	1/10W
R221	1-216-809-11	METAL CHIP	100	5%	1/10W
R222	1-216-809-11	METAL CHIP	100	5%	1/10W
R223	1-216-809-11	METAL CHIP	100	5%	1/10W
R224	1-216-864-11	SHORT CHIP	0		

Ref. No.	Part No.	Description			Remark
R225	1-216-809-11	METAL CHIP	100	5%	1/10W
R226	1-216-864-11	SHORT CHIP	0		
R228	1-216-833-11	METAL CHIP	10K	5%	1/10W
R229	1-216-833-11	METAL CHIP	10K	5%	1/10W
R231	1-216-864-11	SHORT CHIP	0		
R232	1-216-864-11	SHORT CHIP	0		
R233	1-216-864-11	SHORT CHIP	0		
R234	1-216-864-11	SHORT CHIP	0		
R235	1-216-864-11	SHORT CHIP	0		
R236	1-216-864-11	SHORT CHIP	0		
R237	1-216-864-11	SHORT CHIP	0		
R238	1-216-864-11	SHORT CHIP	0		
R239	1-216-864-11	SHORT CHIP	0		
R240	1-216-864-11	SHORT CHIP	0		
R241	1-216-864-11	SHORT CHIP	0		
R242	1-216-864-11	SHORT CHIP	0		
R243	1-216-817-11	METAL CHIP	470	5%	1/10W
R244	1-216-817-11	METAL CHIP	470	5%	1/10W
R245	1-216-817-11	METAL CHIP	470	5%	1/10W
R246	1-216-817-11	METAL CHIP	470	5%	1/10W
R247	1-216-817-11	METAL CHIP	470	5%	1/10W
R248	1-216-817-11	METAL CHIP	470	5%	1/10W
R249	1-216-833-11	METAL CHIP	10K	5%	1/10W
R250	1-216-833-11	METAL CHIP	10K	5%	1/10W
R251	1-216-809-11	METAL CHIP	100	5%	1/10W
R252	1-216-809-11	METAL CHIP	100	5%	1/10W
R253	1-216-809-11	METAL CHIP	100	5%	1/10W
R254	1-216-864-11	SHORT CHIP	0		
R255	1-216-864-11	SHORT CHIP	0		
R256	1-216-864-11	SHORT CHIP	0		
R257	1-216-803-11	METAL CHIP	33	5%	1/10W
R258	1-216-803-11	METAL CHIP	33	5%	1/10W
R259	1-216-803-11	METAL CHIP	33	5%	1/10W
R260	1-216-864-11	SHORT CHIP	0		
R261	1-216-864-11	SHORT CHIP	0		
R262	1-216-864-11	SHORT CHIP	0		
R263	1-216-801-11	METAL CHIP	22	5%	1/10W
R264	1-216-864-11	SHORT CHIP	0		
R265	1-216-864-11	SHORT CHIP	0		
R266	1-216-864-11	SHORT CHIP	0		
R267	1-216-864-11	SHORT CHIP	0		
R268	1-216-864-11	SHORT CHIP	0		
R269	1-216-864-11	SHORT CHIP	0		
R270	1-216-833-11	METAL CHIP	10K	5%	1/10W
R271	1-216-857-11	METAL CHIP	1M	5%	1/10W
R272	1-216-809-11	METAL CHIP	100	5%	1/10W
R281	1-216-809-11	METAL CHIP	100	5%	1/10W
R282	1-216-809-11	METAL CHIP	100	5%	1/10W
R301	1-216-304-11	RES-CHIP	3.3	5%	1/10W
R302	1-216-304-11	RES-CHIP	3.3	5%	1/10W
R303	1-216-304-11	RES-CHIP	3.3	5%	1/10W
R304	1-216-809-11	METAL CHIP	100	5%	1/10W
R305	1-216-809-11	METAL CHIP	100	5%	1/10W
R306	1-216-809-11	METAL CHIP	100	5%	1/10W
R307	1-216-809-11	METAL CHIP	100	5%	1/10W
R308	1-216-809-11	METAL CHIP	100	5%	1/10W
R309	1-216-809-11	METAL CHIP	100	5%	1/10W
R310	1-216-809-11	METAL CHIP	100	5%	1/10W

POWER-AMP

Ref. No.	Part No.	Description			Remark
R311	1-216-809-11	METAL CHIP	100	5%	1/10W
R312	1-216-809-11	METAL CHIP	100	5%	1/10W
R316	1-216-835-11	METAL CHIP	15K	5%	1/10W
R317	1-216-835-11	METAL CHIP	15K	5%	1/10W
R318	1-216-835-11	METAL CHIP	15K	5%	1/10W
R322	1-216-864-11	SHORT CHIP	0		
R323	1-216-864-11	SHORT CHIP	0		
R324	1-216-864-11	SHORT CHIP	0		
R328	1-216-864-11	SHORT CHIP	0		
R329	1-216-864-11	SHORT CHIP	0		
R330	1-216-864-11	SHORT CHIP	0		
R334	1-216-809-11	METAL CHIP	100	5%	1/10W
R335	1-216-809-11	METAL CHIP	100	5%	1/10W
R336	1-216-809-11	METAL CHIP	100	5%	1/10W
R337	1-216-304-11	RES-CHIP	3.3	5%	1/10W
R338	1-216-304-11	RES-CHIP	3.3	5%	1/10W
R339	1-216-304-11	RES-CHIP	3.3	5%	1/10W
R340	1-216-304-11	RES-CHIP	3.3	5%	1/10W
R341	1-216-304-11	RES-CHIP	3.3	5%	1/10W
R342	1-216-304-11	RES-CHIP	3.3	5%	1/10W
R343	1-216-304-11	RES-CHIP	3.3	5%	1/10W
R344	1-216-304-11	RES-CHIP	3.3	5%	1/10W
R345	1-216-304-11	RES-CHIP	3.3	5%	1/10W
R346	1-216-609-11	METAL CHIP	18	0.5%	1/10W
R347	1-216-609-11	METAL CHIP	18	0.5%	1/10W
R348	1-216-609-11	METAL CHIP	18	0.5%	1/10W
R349	1-216-609-11	METAL CHIP	18	0.5%	1/10W
R350	1-216-609-11	METAL CHIP	18	0.5%	1/10W
R351	1-216-609-11	METAL CHIP	18	0.5%	1/10W
R352	1-216-609-11	METAL CHIP	18	0.5%	1/10W
R353	1-216-609-11	METAL CHIP	18	0.5%	1/10W
R354	1-216-609-11	METAL CHIP	18	0.5%	1/10W
R355	1-216-609-11	METAL CHIP	18	0.5%	1/10W
R356	1-216-609-11	METAL CHIP	18	0.5%	1/10W
R357	1-216-609-11	METAL CHIP	18	0.5%	1/10W
R358	1-216-304-11	RES-CHIP	3.3	5%	1/10W
R359	1-216-304-11	RES-CHIP	3.3	5%	1/10W
R360	1-216-304-11	RES-CHIP	3.3	5%	1/10W
R361	1-216-833-11	METAL CHIP	10K	5%	1/10W
R362	1-216-833-11	METAL CHIP	10K	5%	1/10W
R363	1-216-833-11	METAL CHIP	10K	5%	1/10W
R364	1-216-833-11	METAL CHIP	10K	5%	1/10W
R365	1-216-833-11	METAL CHIP	10K	5%	1/10W
R366	1-216-833-11	METAL CHIP	10K	5%	1/10W
R367	1-216-833-11	METAL CHIP	10K	5%	1/10W
R368	1-216-833-11	METAL CHIP	10K	5%	1/10W
R369	1-216-833-11	METAL CHIP	10K	5%	1/10W
R370	1-216-833-11	METAL CHIP	10K	5%	1/10W
R371	1-216-833-11	METAL CHIP	10K	5%	1/10W
R372	1-216-833-11	METAL CHIP	10K	5%	1/10W
R373	1-216-833-11	METAL CHIP	10K	5%	1/10W
R374	1-216-833-11	METAL CHIP	10K	5%	1/10W
R375	1-216-833-11	METAL CHIP	10K	5%	1/10W
R376	1-216-833-11	METAL CHIP	10K	5%	1/10W
R377	1-216-833-11	METAL CHIP	10K	5%	1/10W
R378	1-216-833-11	METAL CHIP	10K	5%	1/10W
R379	1-216-833-11	METAL CHIP	10K	5%	1/10W
R380	1-216-833-11	METAL CHIP	10K	5%	1/10W
R381	1-216-833-11	METAL CHIP	10K	5%	1/10W
R382	1-216-833-11	METAL CHIP	10K	5%	1/10W
R383	1-216-833-11	METAL CHIP	10K	5%	1/10W
R384	1-216-833-11	METAL CHIP	10K	5%	1/10W
R385	1-216-136-00	RES-CHIP	2.7	5%	1/8W
R386	1-216-136-00	RES-CHIP	2.7	5%	1/8W
R387	1-216-136-00	RES-CHIP	2.7	5%	1/8W
R388	1-216-136-00	RES-CHIP	2.7	5%	1/8W
R389	1-216-136-00	RES-CHIP	2.7	5%	1/8W
R390	1-216-136-00	RES-CHIP	2.7	5%	1/8W
R391	1-216-136-00	RES-CHIP	2.7	5%	1/8W
R392	1-216-136-00	RES-CHIP	2.7	5%	1/8W
R393	1-216-136-00	RES-CHIP	2.7	5%	1/8W
R394	1-216-136-00	RES-CHIP	2.7	5%	1/8W
R395	1-216-136-00	RES-CHIP	2.7	5%	1/8W
R396	1-216-136-00	RES-CHIP	2.7	5%	1/8W
R399	1-216-864-11	SHORT CHIP	0		
R400	1-216-845-11	METAL CHIP	100K	5%	1/10W
R401	1-216-845-11	METAL CHIP	100K	5%	1/10W
R402	1-216-845-11	METAL CHIP	100K	5%	1/10W
R403	1-216-845-11	METAL CHIP	100K	5%	1/10W
R404	1-216-845-11	METAL CHIP	100K	5%	1/10W
R405	1-216-845-11	METAL CHIP	100K	5%	1/10W
R406	1-216-845-11	METAL CHIP	100K	5%	1/10W
R407	1-216-845-11	METAL CHIP	100K	5%	1/10W
R408	1-216-845-11	METAL CHIP	100K	5%	1/10W
R409	1-216-845-11	METAL CHIP	100K	5%	1/10W
R410	1-216-845-11	METAL CHIP	100K	5%	1/10W
R411	1-216-845-11	METAL CHIP	100K	5%	1/10W
R412	1-216-845-11	METAL CHIP	100K	5%	1/10W
R413	1-216-845-11	METAL CHIP	100K	5%	1/10W
R414	1-216-845-11	METAL CHIP	100K	5%	1/10W
R415	1-216-845-11	METAL CHIP	100K	5%	1/10W
R416	1-216-845-11	METAL CHIP	100K	5%	1/10W
R417	1-216-845-11	METAL CHIP	100K	5%	1/10W
R418	1-216-845-11	METAL CHIP	100K	5%	1/10W
R451	1-216-833-11	METAL CHIP	10K	5%	1/10W
R452	1-216-845-11	METAL CHIP	100K	5%	1/10W
R453	1-216-833-11	METAL CHIP	10K	5%	1/10W
R454	1-216-833-11	METAL CHIP	10K	5%	1/10W
R455	1-216-823-11	METAL CHIP	1.5K	5%	1/10W
R456	1-216-825-11	METAL CHIP	2.2K	5%	1/10W
R457	1-216-822-11	METAL CHIP	1.2K	5%	1/10W
R458	1-216-825-11	METAL CHIP	2.2K	5%	1/10W
		< TRANSFORMER >			
⚠T101	1-443-649-11	TRANSFORMER, CONVERTER (US, CND)			
⚠T101	1-443-651-11	TRANSFORMER, CONVERTER (EXCEPT US, CND)			
⚠T102	1-443-650-11	TRANSFORMER, CONVERTER			
		< THERMISTOR >			
⚠TH101	1-805-841-21	THERMISTOR, NTC 3.0 (US, CND)			
⚠TH101	1-805-842-21	THERMISTOR, NTC 6.0 (EXCEPT US, CND)			

POWER-AMP SCART SWITCH

Ref. No.	Part No.	Description			Remark
		< VARISTOR >			
⚠VDR101	1-805-482-11	VARISTOR			
		< VIBRATOR >			
X271	1-795-660-21	QUARTZ CRYSTAL UNIT (49.152MHz)			
**********					
	A-1124-330-A	SCART BOARD, COMPLETE (AEP, UK, RU)			
		**********			
		< CAPACITOR >			
C951	1-164-156-11	CERAMIC CHIP	0.1uF		25V
C952	1-126-933-11	ELECT	100uF	20%	16V
C953	1-115-156-11	CERAMIC CHIP	1uF		10V
C954	1-115-156-11	CERAMIC CHIP	1uF		10V
C955	1-115-156-11	CERAMIC CHIP	1uF		10V
C956	1-164-156-11	CERAMIC CHIP	0.1uF		25V
C957	1-126-933-11	ELECT	100uF	20%	16V
C958	1-162-927-11	CERAMIC CHIP	100PF	5%	50V
C959	1-126-964-11	ELECT	10uF	20%	50V
C960	1-126-916-11	ELECT	1000uF	20%	6.3V
C961	1-126-916-11	ELECT	1000uF	20%	6.3V
C962	1-126-916-11	ELECT	1000uF	20%	6.3V
C963	1-126-916-11	ELECT	1000uF	20%	6.3V
C964	1-162-960-11	CERAMIC CHIP	220PF	10%	50V
C965	1-162-960-11	CERAMIC CHIP	220PF	10%	50V
		< CONNECTOR >			
CN951	1-784-778-11	CONNECTOR, FFC 17P			
		< DIODE >			
D952	8-719-988-61	DIODE 1SS355TE-17			
		< IC >			
IC951	6-707-489-01	IC BH7868FS-E2			
		< JACK >			
J951	1-816-044-11	CONNECTOR, SQUARE TYPE 21P (☞ OUTPUT (TV))			
		< COIL >			
L951	1-469-525-11	INDUCTOR	10uH		
		< TRANSISTOR >			
Q951	8-729-027-52	TRANSISTOR	DTC124EKA-T146		
Q952	8-729-027-52	TRANSISTOR	DTC124EKA-T146		
Q954	8-729-120-28	TRANSISTOR	2SC1623-L5L6		
Q955	8-729-027-23	TRANSISTOR	DTA114EKA-T146		
Q956	8-729-027-59	TRANSISTOR	DTC144EKA-T146		
Q957	8-729-027-23	TRANSISTOR	DTA114EKA-T146		
Q958	8-729-027-59	TRANSISTOR	DTC144EKA-T146		
Q959	8-729-027-59	TRANSISTOR	DTC144EKA-T146		
		< RESISTOR >			
R951	1-216-821-11	METAL CHIP	1K	5%	1/10W
R952	1-216-809-11	METAL CHIP	100	5%	1/10W
R953	1-216-809-11	METAL CHIP	100	5%	1/10W
R954	1-216-809-11	METAL CHIP	100	5%	1/10W
R955	1-216-809-11	METAL CHIP	100	5%	1/10W
R956	1-216-864-11	SHORT CHIP	0		
R957	1-216-864-11	SHORT CHIP	0		
R958	1-216-864-11	SHORT CHIP	0		
R959	1-216-864-11	SHORT CHIP	0		
R960	1-218-285-11	METAL CHIP	75	5%	1/10W
R961	1-218-285-11	METAL CHIP	75	5%	1/10W
R962	1-218-285-11	METAL CHIP	75	5%	1/10W
R963	1-218-285-11	METAL CHIP	75	5%	1/10W
R965	1-216-821-11	METAL CHIP	1K	5%	1/10W
R966	1-216-821-11	METAL CHIP	1K	5%	1/10W
R967	1-216-845-11	METAL CHIP	100K	5%	1/10W
R968	1-216-845-11	METAL CHIP	100K	5%	1/10W
R970	1-216-833-11	METAL CHIP	10K	5%	1/10W
R971	1-216-841-11	METAL CHIP	47K	5%	1/10W
R972	1-216-849-11	METAL CHIP	220K	5%	1/10W
R973	1-216-825-11	METAL CHIP	2.2K	5%	1/10W
R974	1-216-825-11	METAL CHIP	2.2K	5%	1/10W
R975	1-216-825-11	METAL CHIP	2.2K	5%	1/10W
R976	1-216-821-11	METAL CHIP	1K	5%	1/10W
R977	1-216-837-11	METAL CHIP	22K	5%	1/10W
R978	1-216-815-11	METAL CHIP	330	5%	1/10W
R979	1-216-815-11	METAL CHIP	330	5%	1/10W
R980	1-216-815-11	METAL CHIP	330	5%	1/10W
R981	1-216-815-11	METAL CHIP	330	5%	1/10W
**********					
		SWITCH BOARD			
		**********			
		< CONNECTOR >			
CN801	1-784-869-21	CONNECTOR, FFC (LIF (NON-ZIF)) 17P			
CN802	1-691-648-11	SOCKET, CONNECTOR 15P			
		< LED >			
D806	8-719-045-55	LED SEC1201C (AUTO)			
D807	8-719-045-55	LED SEC1201C (FOCUS SURROUND)			
D808	8-719-045-55	LED SEC1201C (WIDE SURROUND)			
D809	8-719-045-55	LED SEC1201C (2CH STEREO)			
		< JUMPER RESISTOR >			
L801	1-216-864-11	SHORT CHIP	0		
L802	1-216-864-11	SHORT CHIP	0		
L803	1-216-864-11	SHORT CHIP	0		
		< TRANSISTOR >			
Q811	8-729-027-43	TRANSISTOR	DTC114EKA-T146		
Q812	8-729-027-43	TRANSISTOR	DTC114EKA-T146		
Q813	8-729-027-43	TRANSISTOR	DTC114EKA-T146		
Q814	8-729-027-43	TRANSISTOR	DTC114EKA-T146		
		< RESISTOR >			
R801	1-216-825-11	METAL CHIP	2.2K	5%	1/10W
R802	1-216-825-11	METAL CHIP	2.2K	5%	1/10W
R803	1-216-821-11	METAL CHIP	1K	5%	1/10W
R804	1-216-825-11	METAL CHIP	2.2K	5%	1/10W
R805	1-216-821-11	METAL CHIP	1K	5%	1/10W

SWITCH

Ref. No.	Part No.	Description			Remark
R806	1-216-825-11	METAL CHIP	2.2K	5%	1/10W
R811	1-216-813-11	METAL CHIP	220	5%	1/10W
R812	1-216-813-11	METAL CHIP	220	5%	1/10W
R813	1-216-813-11	METAL CHIP	220	5%	1/10W
R814	1-216-813-11	METAL CHIP	220	5%	1/10W
R815	1-216-809-11	METAL CHIP	100	5%	1/10W
R816	1-216-809-11	METAL CHIP	100	5%	1/10W
R817	1-216-809-11	METAL CHIP	100	5%	1/10W
R818	1-216-809-11	METAL CHIP	100	5%	1/10W
R825	1-216-821-11	METAL CHIP	1K	5%	1/10W
		< SWITCH >			
S801	1-762-875-21	SWITCH, KEYBOARD (►)			
S802	1-762-875-21	SWITCH, KEYBOARD (VOLUME +)			
S804	1-762-875-21	SWITCH, KEYBOARD (FUNCTION)			
S805	1-762-875-21	SWITCH, KEYBOARD (■)			
S806	1-762-875-21	SWITCH, KEYBOARD (VOLUME –)			

****

MISCELLANEOUS
****

52	1-828-980-11	WIRE (FLAT TYPE) (15 CORE)
53	1-828-338-11	WIRE (FLAT TYPE) (17 CORE)
102	1-828-190-51	WIRE (FLAT TYPE) (12 CORE) (US, CND)
104	1-693-669-11	TUNER UNIT (TM-10CE) (AEP, UK, RU)
104	1-693-671-11	TUNER UNIT (TM-10E) (SP)
104	1-693-672-11	TUNER UNIT (TM-10U) (US, CND)
105	1-828-320-11	WIRE (FLAT TYPE) (11 CORE)
106	1-828-316-11	WIRE (FLAT TYPE) (11 CORE)
107	1-827-731-11	WIRE (FLAT TYPE) (11 CORE) (AEP, UK, RU, SP)
107	1-828-957-11	WIRE (FLAT TYPE) (9 CORE) (US, CND)
108	1-828-359-11	WIRE (FLAT TYPE) (19 CORE)
109	1-828-266-51	WIRE (FLAT TYPE) (28 CORE) (US, CND)
151	1-500-459-11	FILTER, CLAMP (FERRITE CORE)
153	1-828-327-11	WIRE (FLAT TYPE) (13 CORE) (US, CND)
153	1-828-329-11	WIRE (FLAT TYPE) (13 CORE) (AEP, UK, RU, SP)
157	1-828-367-11	WIRE (FLAT TYPE) (21 CORE)
158	1-828-990-11	WIRE (FLAT TYPE) (17 CORE) (AEP, UK, RU)
⚠203	1-777-071-23	CORD, POWER (AEP, UK, SP, RU)
⚠203	1-783-820-11	CORD, POWER (US, CND)
206	1-828-252-51	WIRE (FLAT TYPE) (24 CORE)
207	1-828-292-11	WIRE (FLAT TYPE) (5 CORE)
401	A-6071-669-A	LOADING ASSY (M) (Including disktray open/ close motor (M301), MS203 board)
⚠403	8-820-290-02	OPTICAL PICK-UP BLOCK KHM-310CAA/C2RP (Including sled mortor, spindle mortor)
⚠F101	1-533-454-12	FUSE, GLASS TUBE (DIA. 5) (6.3A/125V) (US, CND)
⚠F101	1-533-473-12	FUSE, GLASS TUBE (DIA. 5) (T6.3AL 250V) (AEP, UK, RU, SP)
M450	1-787-331-11	FAN, D.C.

****

ACCESSORIES
****

⚠	1-770-019-61	ADAPTOR, CONVERSION PLUG (UK)

MEMO

REVISION HISTORY

Clicking the version allows you to jump to the revised page.
Also, clicking the version at the upper right on the revised page allows you to jump to the next revised page.

Ver.	Date	Description of Revision
1.0	2005.05	New
1.1	2005.10	Addition of DISASSEMBLY of Loading Panal Assy and Change of PART No. for Loading Panel Assy Change of MAIN board (Suffix-12) Change of FL and POWER-AMP boards (Suffix-14) Change of PART No. for IC101 on the DMB10 board Change of PART No. for R5504, 5505, 5524 – 5531, 5534 – 5541 on the MIB01 board (ECN-ECB12727/ECB14430/ECB17851/ECB32103/ENG-05003)
1.2	2005.12	Addition of Part No. for MIB01 board and note (US, Canadian models) (SPM-05086)

SS-WSX1/X1F

SERVICE MANUAL

Ver. 1.0 2005.05

US Model
Canadian Model
AEP Model
UK Model
E Model

- SS-WSX1/X1F are the speaker system in DAV-X1.

Photo: SS-WSX1 Photo: SS-X1F

SPECIFICATIONS

Front Speaker (SS-X1F)

Speaker system	Bass reflex, magnetically shielded
Speaker unit	50 mm (2 inches) cone type × 2
Rated impedance	6 ohms
Dimensions (approx.)	162 × 78 × 134 mm (6 1/2 × 3 1/8 × 5 3/8 inches) (w/h/d)
Mass (approx.)	0.7 kg (1 lb 9oz)

Subwoofer (SS-WSX1)

Speaker system	Bass reflex, magnetically shielded
Speaker unit	150 mm (6 inches) cone type × 2
Rated impedance	6 ohms
Dimensions (approx.)	205 × 362 × 489 mm (8 1/8 × 14 3/8 × 19 3/8 inches) (w/h/d)
Mass (approx.)	9.8 kg (21 lb 10 oz)

Design and specifications are subject to change without notice.

- JIG
  When disassembling the set, use the following jig (for speaker removal).
  Part No.: J-2501-238-A JIG FOR SPEAKER REMOVAL

SPEAKER SYSTEM

9-879-626-01
2005E05-1
© 2005.05

Sony Corporation
Audio Group
Published by Sony Engineering Corporation

SONY®

EXPLODED VIEWS

NOTE:

- -XX and -X mean standardized parts, so they may have some difference from the original one.
- Color Indication of Appearance Parts
  Example:
  KNOB, BALANCE (WHITE) . . . (RED)
  ↑ Parts Color ↑ Cabinet's Color
- Items marked "*" are not stocked since they are seldom required for routine service. Some delay should be anticipated when ordering these items.
- The mechanical parts with no reference number in the exploded views are not supplied.

(1) SS-X1F

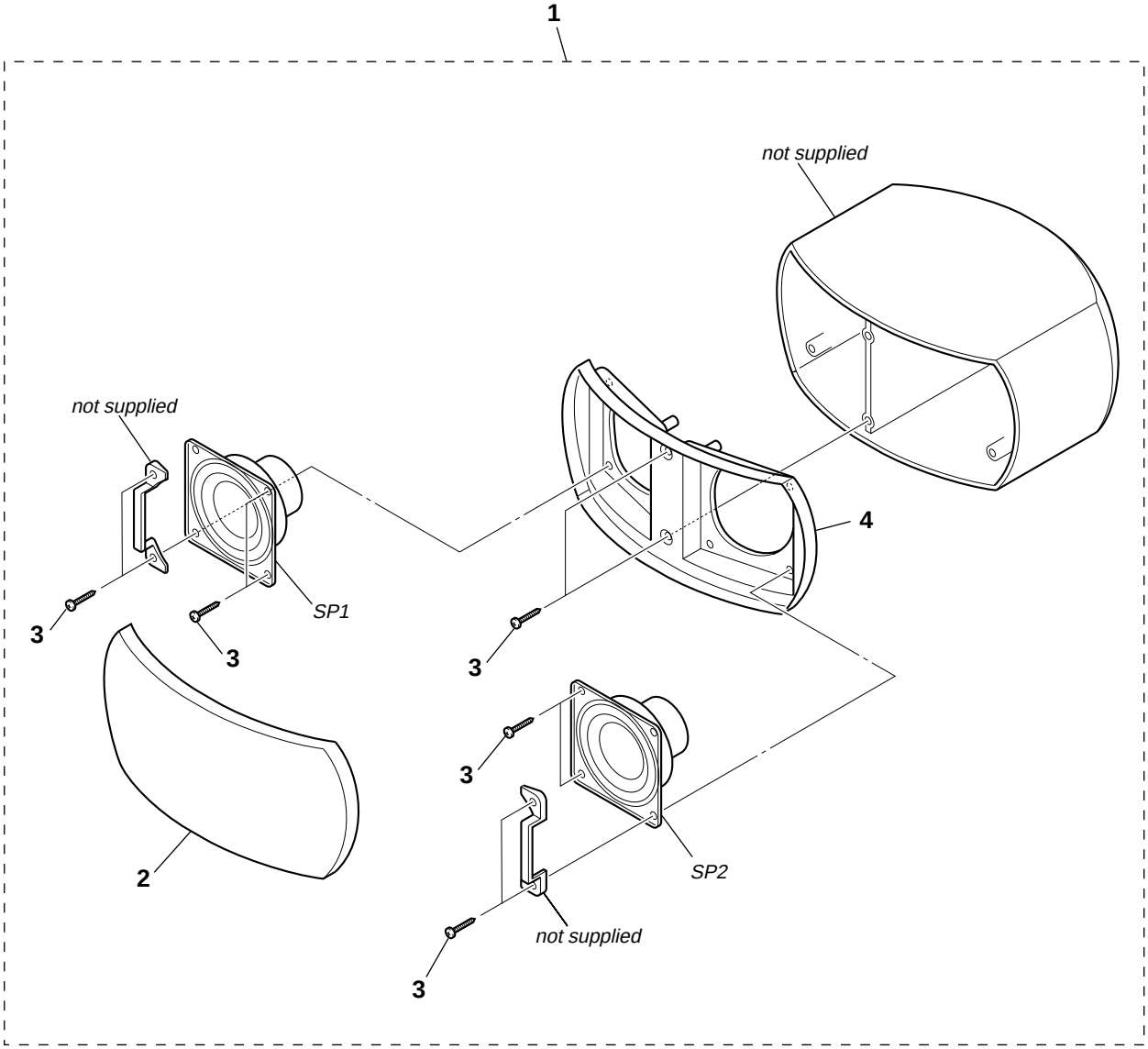

Ref. No.	Part No.	Description	Remark
1	A-1103-389-A	OVERALL ASSY	
2	X-2050-909-1	GRILLE ASSY, FRONT	
3	4-874-614-62	SCREW (1) (3.5X16), TAPPING	
4	2-589-911-01	BOARD, BAFFLE	
SP1	1-826-084-11	LOUDSPEAKER (5cm)	
SP2	1-826-084-11	LOUDSPEAKER (5cm)	

(2) SS-WSX1

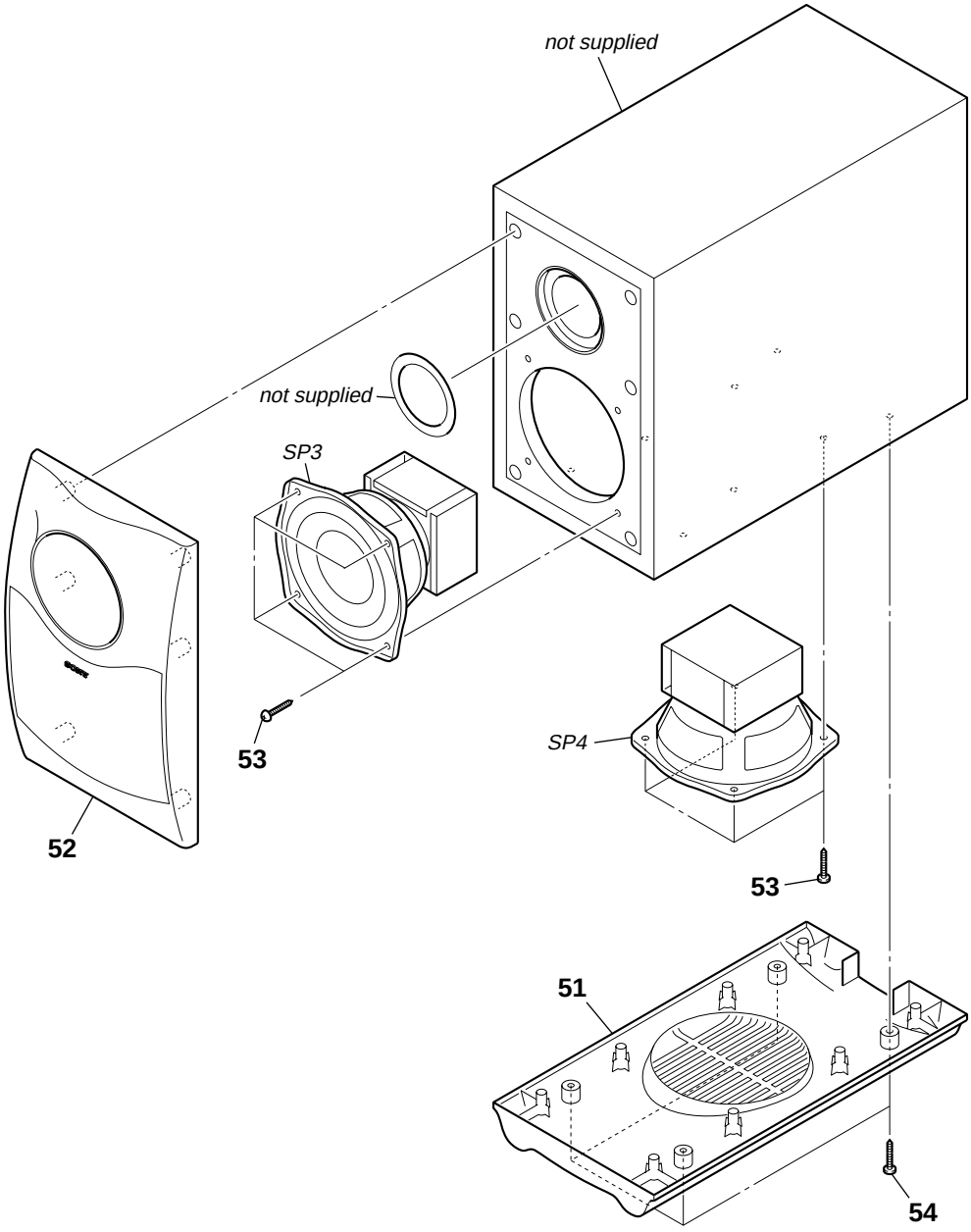

Ref. No.	Part No.	Description	Remark
51	2-589-922-01	PANEL, BOTTOM	
52	X-2050-911-1	PANEL ASSY, FRONT	
53	4-229-966-12	SCREW (4X16), +BV TAPPING	
54	4-874-614-62	SCREW (1) (3.5X16), TAPPING	

Ref. No.	Part No.	Description	Remark
SP3	1-826-085-11	LOUDSPEAKER (15cm)	
SP4	1-826-085-11	LOUDSPEAKER (15cm)	

REVISION HISTORY

Clicking the version allows you to jump to the revised page.
Also, clicking the version at the upper right on the revised page allows you to jump to the next revised page.

Ver.	Date	Description of Revision
1.0	2005.05	New